Virginia Housing
Low Income Housing
Tax Credit Manual

2021

Version
2021.2
01/01/2021

Virginia Housing

Trademarks

Trademarked names may appear throughout this document. Rather than list the names and entities that own the trademark or insert a trademark symbol with each mention of the trademarked name, the names are used for editorial purposes only and to the benefit of the trademark owner with no intention of infringing upon that trademark.

File Information

Requirements Template Version: 1.0
Last Saved At: 12/30/2020 10:44 AM

Revision History

Date	Version	Who	Description
01/12/2021	2021.2	Aniyah Moaney	Updated UD Guidelines to 2021
02/02/2021	2021.2	Aniyah Moaney	Updated RD High Priority List
02/02/2021	2021.2	Aniyah Moaney	Updated RESNET Rater Certification form

Table of Contents

1.SCHEDULE FOR 2021 1

2. PROGRAM UPDATES 2

3. GENERAL PROGRAM INFORMATION 3

3.1. Program Overview 3
3.2. Subsidy Layering Requirements 4

4. POOLS AND PERCENTAGE OF AVAILABLE CREDITS 6

4.1. Non-Profit Pool 6
4.2. New Construction Pool 7
4.3. Northern Virginia/Planning District 8 (Inner Washington MSA) Pool 7
4.4. Northwest/North Central Virginia Area Pool 7
4.5. Richmond MSA Pool 8
4.6. Tidewater MSA Pool 9
4.7. Balance of State Pool 9
4.8. Local Housing Authority Pool 10
4.9. At-Large Pool 11
4.10. Accessible Supportive Housing Pool 11
4.11. Pre-Allocated Credits 12

5. RANKING AND SCORING 13

5.1. Rules of Ranking 13
5.2. Minimum Threshold Scoring Requirements 13

6. MINIMUM PROGRAM REQUIREMENTS 14

6.1. Minimum Program Requirements 14
6.2. Compliance Monitoring 16

7. LIHTC APPLICATION INFORMATION 17

7.1. Reservation Application for 9% Credits 17
7.2. Reservation Specifications 17
7.3. Developer Fee Calculation 19
7.4. Reservation Criteria 20
7.5. Reservation Application Mandatory Items 21
7.6. Project Readiness—Point Items 25
7.7. Housing Needs Characteristics—Point Items 28
7.8. Development Characteristics—Point Items 30
7.9. Tenant Characteristics—Point Items 36
7.10. Sponsor Characteristics—Point Items 39
7.11. Efficient Use of Resources 44
7.12. Bonus Point Items 45

7.13. Reservation Application- 4% Tax-Exempt Bonds 47
7.14. How to Submit Reservation Applications (9% and 4%) 48

8. ALLOCATION INFORMATION 49

8.1. Allocation Applications 49
8.2. How to Submit Allocation Applications 49
8.3. Allocation Application Mandatory Items 50
8.4. Meeting the 10% Test 51

9. APPLICATION FOR 8609 INFORMATION 52

9.1. Application for 8609 52
9.2. Deadline for 8609 Applications 53
9.3. How to Submit the 8609 Application 53
9.4. Application for 8609 Mandatory Documents 53
9.5. Application for 8609 Deadlines 54
9.6. Corrections to 8609(s) 54

10. RECAPITALIZATION 55

11. QUALIFIED CONTRACT INFORMATION 56

12. PROGRAM ADMINISTRATION 57

12.1. Summary of Program Fees 57
12.2. How to Submit Payments 59
12.3. Updating Program Information 59
12.4. Change of General Partner or Managing Member 59
12.5. Related Entities Limit 60
12.6. Applications are Open to the Public 60
12.7. Authorization of the Executive Director 60

APPENDICES 61

A. Market Study Guidelines and Approved Analyst List 62
B. 2021 Cost Limits 76
C. Revitalization Area Information 78
D. Subsidized Funding Information 80
E. Brick Calculation 82
F. Baseline Energy Efficiency Requirement 84
G. Green Certification Options 86
H. Developer Fee and Deferred Developer Fee Guidelines 90
I. Accessible Supportive Housing Pool Requirements 92
J. General Contractor Cost Certification Guidelines 94
K. Credit Refresh Process 101
L. Income Averaging 103
M. Rules of Ranking 105
N. Compliance Monitoring 107
O. Previous Participation Certification 109

P. SITE CONTROL DOCUMENTATION 114
Q. RESNET RATER CERTIFICATION 116
R. ATTORNEY'S OPINION 119
S. APPRAISAL GUIDELINES 125
T. ZONING CERTIFICATION 134
U. PLANS AND SPECIFICATIONS REQUIREMENTS 138
V. RELOCATION PLAN GUIDELINES 140
W. PLAN OF DEVELOPMENT CERTIFICATION 146
X. SECTION 8 WAITING LIST PREFERENCE 150
Y. PROJECT-BASED VOUCHER REQUIREMENTS 154
Z. RURAL DEVELOPMENT "HIGH PRIORITY" LIST 156
AA. COMMUNITY ROOM GUIDELINES 158
BB. MARKETING PLAN REQUIREMENTS 160
CC. PROXIMITY TO TRANSPORTATION CERTIFICATION 162
DD. UNIVERSAL DESIGN GUIDELINES 165
EE. EFFICIENT USE OF RESOURCES CALCULATIONS 179
FF. PERMANENT SUPPORTIVE HOUSING CERTIFICATION 183
GG LIST OF DEVELOPMENTS (SCHEDULE A) 186
HH. HOMEOWNERSHIP PLAN INFORMATION 188
II. DEVELOPER EXPERIENCE 190
JJ. FINAL INSPECTION PROCESS 192
KK. FINAL COST CERTIFICATION. 195
LL. .CERTIFICATION OF SOURCES AND USES (8609) 198
MM. QUALIFIED CONTRACT REQUEST PROCESS 200
NN. HYBRID 9%-4% DEAL PARAMETERS 209
OO. NON-PROFIT QUESTIONNAIRE 212
PP. 2019-2021 MINIMUM DESIGN AND CONSTRUCTION REQUIREMENTS 221
QQ. EXISTING CONDITIONS QUESTIONNAIRE 242

VERSION HISTORY 247

1. Schedule for 2021

Below is the schedule for the 2021 Low Income Housing Tax Credit cycle. These dates are approximate and may be subject to change.

Date	Description
January 7, 2021	LIHTC Workshop- Virtual
January 28, 2021 @ 12 p.m.	Locality Notification Information (LNI) deadline (all 9% applications)
March 18, 2021 @ 12 p.m.	Reservation application deadline (9%)
March 18, 2021 @ 12 p.m.	Accessible Supportive Housing (ASH) application deadline
March 25, 2021	Applications posted to Virginia Housing website
May 6, 2021	Preliminary rankings announced/begin comment period
May 13, 2021	End comment period/begin rebuttal period
May 20, 2021	End rebuttal period
June 6, 2021	10% test deadline for Disaster Relief deals
June 10, 2021	Final rankings announced
June 24, 2021	Review final rankings with Virginia Housing Board
Early to mid-July, 2021	VHDA mails Reservation documents (Agreement, Contract to Enforce Representations, Extended Use Agreement, Election to Fix, Gross Rent Floor Election)
September 30, 2021 @ 12:00 p.m.	Allocation application deadline
November 18, 2021	Finalize allocations

Note: 10% tests are due 30 days prior to the 12-month deadline for meeting the expenditure test. This is to ensure the test will be met. Please contact the Tax Credit Allocation department if you have any concerns with meeting this deadline.

2. Program Updates

The following program updates go into effect on January 1, 2021.

	Program Updates
2.1	Following the transformation from to Virginia Housing, some of our legal documents may still refer to VHDA in lieu of Virginia Housing.
2.2	Extended Use Agreement(s) moving forward will all have language that enables the use of Income Averaging.
2.3	The QAP mandates that all procedures and requirements in the IRC must be complied with and satisfied. The QAP further recites that federal law requires Virginia Housing to monitor developments receiving credits for compliance with the requirements of §42 of the IRC. In furtherance of that mandate, Virginia Housing supplements the QAP, effective January 1, 2021, to provide that Virginia Housing will monitor compliance, as required by Section 1.42–5 of the federal Income Tax Regulations, in accordance with final regulations published February 26, 2019, in the Federal Register (84 FR 6076) https://www.federalregister.gov/documents/2019/02/26/2019-03388/amendments-to-the-low-income-housing-credit-compliance-monitoring-regulations , as amended by proposed regulations published July 7, 2020, in the Federal Register (85 FR 40610) https://www.govinfo.gov/content/pkg/FR-2020-07-07/pdf/2020-14555.pdf.
2.4	Please use fixed 4% rate for all tax-exempt applications.

3. General Program Information

This is a very brief, general overview of the rules applicable to the tax credit program and should not be substituted for competent legal counsel and accounting advice. Additional information can also be found in the appendices of this manual.

3.1. Program Overview

The Tax Reform Act of 1986 established the LIHTC to encourage private investment in affordable housing. More specifically, the LIHTC is a dollar-for-dollar reduction in tax liability to the owner of a qualified low-income housing development for the acquisition, rehabilitation ("rehab"), or construction of low-income rental housing units. The amount of credits allocated is based directly on the number of qualified low-income units that meet federal rent and income targeting requirements.

To qualify for tax credits, a development must meet a number of conditions set forth in Section 42 of the Internal Revenue Code (IRC). In particular, the development must provide low-income housing units that meet certain occupancy and rent requirements.

The developer of a residential rental development that qualifies for tax credits will typically establish a general partnership or limited liability company (LLC) to own the development. The developer usually assumes the role of Managing General Partner or Managing Member, retaining 0.01% of the ownership. The remaining 99.99% shares are sold to investors interested in using the tax credits to reduce their federal tax liability. The capital invested by the investor partner accounts for all or most of the development's equity. This reduces the need for debt financing and thereby reduces the amount of the development's annual debt service. While there is no direct rental subsidy to households under this program, the increased equity and reduced debt allows for lower rents than would otherwise be possible.

Investors can claim these tax credits annually over a ten-year term, beginning with the tax year in which the development is placed in service or, at the owner's election, the following tax year.

States receive tax credits based on population, so the amount of available competitive 9% credits in each state is limited. Most credits are allocated by the states during one or more competitive cycles held each year. Selection priorities and procedures vary in each state and are outlined in a Qualified Allocation Plan ("QAP").

While the LIHTC is a federal credit, the LIHTC program is administered by state housing finance agency in each state. In Virginia, Virginia Housing is responsible for the LIHTC program.

The tax credit program is complex, with many pitfalls awaiting those inexperienced in process. You are therefore strongly encouraged to seek competent legal and accounting advice early in the development process.

There are three types of low-income housing tax credits:

Type of Tax Credit	Description
9% credit	The 9% credit is determined on a ten-year, present value calculation of 70% of the qualified basis of the low-income units for new construction or substantial rehab of developments not federally subsidized or financed with tax-exempt bonds.
4% for New Construction or Substantial Rehab	The 4% credit is available to new construction and substantial rehab developments that are federally subsidized with tax-exempt bonds. This credit amount is determined by a present value calculation on 30% of the qualified basis over ten years.
4% for the Acquisition of Existing Developments	The 4% credit is also available for the acquisition of existing developments, if the development was not previously placed in service by the owner or a related party and is acquired at least 10 years after the later of (a) the date the development was last placed in service or (b) the date of the most recent non-qualified substantial improvements.

For a more in-depth explanation of the tax credit program and a more detailed discussion of the many requirements, the following resources may be helpful:

- *Low-Income Housing Tax Credit Handbook*, *Novogradac & Company LLP*
- *Tax Credits for Low Income Housing Guidebook*, *13th Edition (20th Anniversary Edition)*, by Joseph Guggenheim, Simon Publications, (301) 320-5771
- *Low-Income Housing Tax Credit Handbook* – Market Segment Specialization Program

3.2. Subsidy Layering Requirements

Combining tax credits with certain other forms of federal assistance will necessitate certification by HUD that the assistance will not be more than is necessary to make the development feasible. If you expect to combine low-income housing tax credits with one of the forms of federal subsidy listed below, please contact HUD to determine the process, requirements and timing of the required subsidy layering review.

- Section 312 Rehabilitation Loans (24 CFR 3.V.510),
- Community Development Block Grants (24 CFR 3.V.570) -only loan guarantees under subpart M, grants to Indian tribes under title I of the Housing and Community Development Act of 1974 and grants under the HUD-administered Small Cities program under subpart F.
- Loan Guarantee Recovery Fund (24 CFR 3.V.573)
- Housing Opportunities for Persons with Aids (24 CFR 3.V.574)
- Emergency Solutions Grants Program (24 CFR 3.V.576)

- Continuum of Care Program (24 CFR 3.V.578)
- Use of Federal Real Property to Assist the Homeless (24 CFR 3.V.581)
- Shelter Plus Care (24 CFR 3.V.582)
- Supportive Housing Program (24 CFR 3.V.583)
- Revitalizing Base Closure Communities and Community Assistance Community Redevelopment and Homeless Assistance (24 CFR 3.V.586)
- John Heinz Neighborhood Development Program (24 CFR 3.V.594)
- Renewal Communities (24 CFR 3.V.599)
- HOME Funds (24 CFR Part 92)
- Housing Trust Funds (24 CFR Parts 91 and 93)
- Project-Based Rental Assistance (24 CFR part 983)

For more details on these programs, please refer to the Electronic Code of Federal Regulations.

4. Pools and Percentage of Available Credits

Given the diverse housing needs in Virginia, Virginia Housing divides the available annual credit amount into pools in which applications submitted by developers will compete. A description of each pool, as well as its respective percentage of available credits follows.

For deals competing in the Accessible Supportive Housing (ASH), Non-Profit, New Construction, and Local Housing Authority (LHA) pools, points related to being located in an area of increasing or decreasing rent burdened populations will be assigned based on the geographic pool to which such development would be assigned if it did not compete in this pool.

4.1. Non-Profit Pool

The annual credit percentage allocated to this pool is 15%. Each new construction or adaptive re-use development that is not funded in the Non-Profit pool will compete in the New Construction pool, if eligible. All other developments not funded in this pool will compete in the applicable geographic pool.

To participate in the Non-Profit Pool, the non-profit entity must:

#	Non-Profit Requirements for Pool
4.1.1	Be authorized to do business in Virginia
4.1.2	Be substantially based or active in the state of Virginia.
4.1.3	Materially participate in the development and operation of the development throughout the compliance period (i.e., regular, continuous and substantial involvement) in the operation of the development throughout the Compliance Period
4.1.4	Own, either directly or through a partnership or limited liability company, 100% of the general partnership or managing member interest
4.1.5	Not be affiliated with or controlled by a for-profit organization
4.1.6	Not have been formed for the principal purpose of competition in the Non-Profit Pool
4.1.7	Not have any staff member, officer or member of the board of directors materially participate, directly or indirectly, in the proposed development as a for-profit entity

4.2. New Construction Pool

The annual credit percentage allocated to this pool is 15% of the following year's annual credit authority. Each new construction or adaptive reuse development (including unfunded developments from the Non-profit Pool in localities listed below), that is located within one of the jurisdictions listed below, will compete in this pool. Each development not funded in this pool will compete in the Northern Virginia geographic pool.

New Construction Pool	
Alexandria City	Loudoun County
Arlington County	Manassas City
Fairfax City	Manassas Park City
Fairfax County	Prince William County
Falls Church City	

4.3. Northern Virginia/Planning District 8 (Inner Washington MSA) Pool

The annual credit percentage allocated to this pool is 18.02%. Each development which is located within one of the jurisdictions listed below (including unfunded developments from the Non-profit and New Construction pools in localities listed below), will compete in this pool.

Northern Virginia/Planning District 8 (Inner Washington MSA)	
Alexandria City	Loudoun County
Arlington County	Manassas City
Fairfax City	Manassas Park City
Fairfax County	Prince William County
Falls Church City	

4.4. Northwest/North Central Virginia Area Pool

The annual credit percentage allocated to this pool is 9.20%. Each development located within one of the jurisdictions listed below will compete in this pool (including unfunded developments from the Non-profit pool in localities listed below).

Northwest/North Central Virginia Area	
Albemarle County	Nelson County
Augusta County	Orange County
Charlottesville City	Page County
Clarke County	Rappahannock County

Northwest/North Central Virginia Area	
Culpeper County	Rockingham County
Fauquier County	Shenandoah County
Fluvanna County	Spotsylvania County
Frederick County	Stafford County
Fredericksburg City	Staunton City
Greene County	Warren County
Harrisonburg City	Waynesboro City
King George County	Winchester City
Madison County	

4.5. Richmond MSA Pool

The annual credit percentage allocated to this pool is 11.63%. Each development located within one of the jurisdictions listed below will compete in this pool (including unfunded developments from the Non-profit pool in localities listed below).

Richmond MSA	
Amelia County	Hopewell City
Caroline County	King & Queen County
Charles City County	King William County
Chesterfield County	Louisa County
Colonial Heights City	New Kent County
Cumberland County	Petersburg City
Dinwiddie County	Powhatan County
Goochland County	Prince George County
Hanover County	Richmond City
Henrico County	Sussex County

4.6. Tidewater MSA Pool

The annual credit percentage allocated to this pool is 17%. Each development located within one of the jurisdictions listed below will compete in this pool (including unfunded developments from the Non-profit pool in localities listed below).

Tidewater MSA	
Chesapeake City	Poquoson City
Gloucester County	Portsmouth City
Hampton City	Suffolk City
Isle of Wight County	Surry County
James City County	Virginia Beach City
Matthews County	Williamsburg City
Newport News City	York County
Norfolk City	

4.7. Balance of State Pool

The annual credit percentage allocated to this pool is 14.15%. Each development (including unfunded non-profit developments) which is not eligible to compete in any of the four geographic pools above will compete in this pool.

Balance of State (Remaining Geographic Areas)	
Accomack County	Covington City
Alleghany County	Craig County
Amherst County	Danville City
Appomattox County	Dickenson County
Bath County	Emporia City
Bedford City	Essex County
Bedford County	Floyd County
Bland County	Franklin City
Botetourt County	Franklin County
Bristol City	Galax City
Brunswick County	Giles County
Buchanan County	Grayson County
Buckingham County	Greensville County
Buena Vista City	Halifax County
Campbell County	Henry County
Carroll County	Highland County
Charlotte County	Lancaster County

Balance of State (Remaining Geographic Areas)	
Lee County	Radford City
Lexington City	Richmond County
Lunenburg County	Roanoke City
Lynchburg City	Roanoke County
Martinsville City	Rockbridge County
Mecklenburg County	Russell County
Middlesex County	Salem City
Montgomery County	Scott County
Northampton County	Smyth County
Northumberland County	Southampton County
Norton City	Tazewell County
Nottoway County	Washington County
Patrick County	Westmoreland County
Pittsylvania County	Wise County
Prince Edward County	Wythe County
Pulaski County	

4.8. Local Housing Authority Pool

The annual credit percentage allocated to this pool is 15%. Each development sponsored by a local housing authority (LHA) or industrial development authority (IDA), if the locality does not have a LHA, as sole general partner or managing member (either directly or through a wholly-owned subsidiary) or as landlord or seller of the land to the tax credit applicant, in the jurisdiction of the LHA or IDA will compete in this pool only. Developments not funded in this pool do not move to any other pool.

If the LHA or IDA is the landlord or seller of the land to the tax credit applicant, but (1) the LHA or IDA is not and will not be a principal in the applicant, **and** (2) no more than 5 units or 10% of the units have project-based subsidy provided by the LHA or IDA, the development will NOT compete in this pool. “Landlord/Seller” means the grantee of the right of first refusal or purchase option, with no ownership interest in the applicant.

4.9. At-Large Pool

The At-Large Pool has been created for all applications not ranked high enough for initial funding in the geographic pools. The At-Large Pool is separated into two tiers.

Tier 1 consists of the next eligible developments, from geographic pools, that could not be fully funded with the remaining credits in those pools. It is these developments, in rank order, that can be fully funded, that will receive credits in tier 1.

Tier 2 consists of all remaining developments ranking above threshold.

4.10. Accessible Supportive Housing Pool

Credits for this pool will be reserved from the following year's allocation and will not exceed 6% of the current year's per capita credit amount unless authorized by Virginia Housing's Board of Commissioners. These credits are available for non-elderly developments.

The minimum requirements to qualify for credits in this Pool are as follows:

#	Minimum Requirements for ASH Pool
4.10.1	At least 15% of the units will serve people with disabilities.
4.10.2	At least 15% of the units will conform to HUD regulations interpreting the fully, permanently accessible unit requirements of Section 504 of the Rehabilitation Act as referenced in the requirements set forth in the Uniform Federal Accessibility Standards "UFAS".
4.10.3	The development will provide rent subsidies in order to ensure occupancy by extremely low-income persons for 15% of the units. Subsidies may apply to any units, not only those built to satisfy Section 504. For purposes of this Pool, "extremely low income" mean households with gross incomes no greater than 40% of the AMGI paying no more than rent calculated at the 40% level.
4.10.4	The units will be actively marketed and rented to households including at least one person with a disability in accordance with a plan submitted as part of the Application for credits and approved by the Executive Director. The developer must also submit the fully executed Virginia Housing Permanent Supportive Housing certification.
4.10.5	The developer must have a demonstrated capacity to develop supportive housing as evidenced by one of the three available CORES certifications or other certification as approved by the Authority.

4.11. Pre-Allocated Credits

Credits pre-allocated to developments will not change Total Credit Authority in the geographic pools in which the developments are located. Deals competing in the New Construction Pool but funded in a different geographic pool or At-Large pool are not guaranteed a future allocation of credits.

The dollar amount of credits reflected for each of the geographic, Non-Profit and LHA pools includes a pro rata portion of the following year's credits, not to exceed 40% of the current year's per capita credit amount unless authorized by Virginia Housing's Board of Commissioners. Developments that will receive a pre-allocation of the following year's credits will be determined when the allocations are issued in December.

All determinations for deals receiving a pre-allocation of credits are at the discretion of the Executive Director.

5. Ranking and Scoring

The QAP contains the “official” scoring criteria and maximum points per development, by which all Applications will be reviewed. Applicants are encouraged to read the QAP, as well as this manual, carefully.

Applications are ranked according to their scores in the pools within which they compete. Reservations will be made to developments in accordance with Virginia Housing's ranking criteria, so long as credits are available within the given pools. Developments seeking more credits than are available within the given pool will have their credit request reduced to what is available.

5.1. Rules of Ranking

For 9% credits, applicants select the pool in which they wish to compete and then they are ranked according to their scores. Scores may reflect adjustments based on the pools where they compete. Deals that select the ASH pool but do not meet the minimum requirements or exceed the credit amount available, will compete in their applicable competitive pool.

Applications for 4% credits are not ranked.

5.2. Minimum Threshold Scoring Requirements

In order to qualify for a reservation of tax credits, applications must meet the following minimum threshold scoring requirements.

Type of Tax Credit	Minimum Threshold Scoring Requirement
9% Credit	Applications for 9% credits, including Accessible Supportive Housing applications must score a minimum of **425** points.
4% Credit	Applications for 4% credits (with tax-exempt bonds) must score a minimum of **325** points.
Hybrid 9% / 4% Credit	Must meet the respective scores for each deal.

6. Minimum Program Requirements

To qualify for tax credits, a development must meet conditions set forth in Section 42 of the Internal Revenue Code (IRC).

6.1. Minimum Program Requirements

The following are minimum requirements of the Low Income Housing Tax Credit program. Failure to comply with any of the following minimum requirements may result in a recapture of credits.

#	Minimum Requirement
6.1.1	A minimum of 20% of the units must be occupied by households with incomes at or below 50% of the area median gross income (AMGI), as adjusted for family size; OR, a minimum of 40% of the units must be occupied by households, with incomes at or below 60% of the AMGI, adjusted for family size; OR, under the Average Income Test, forty percent (40%) or more (25% or more in the case of a project described in Section 142(d)(6)) of the residential units in the project must be both rent restricted and occupied by individuals whose income does not exceed the imputed income limitation designated by the taxpayer with respect to the respective unit. The average of the imputed income limitations designated must not be more than 60% of the area median gross income. The designated imputed income limitation of a unit can only be 20%, 30%, 40%, 50%, 60%, 70%, or 80% of the area median gross income and must be as designated with Virginia Housing in writing. The development must comply with these income restrictions within 12 months of the placed-in-service date (slight variations apply when a development has more than one building). This is commonly referred to as the “20-50”, “40-60”, or “Average Income” test.
6.1.2	Owner may not require an annual minimum income requirement that exceeds the greater of $3,600 or 2.5 times the portion of rent to be paid by tenants receiving rental assistance.
6.1.3	The gross rent charged for a low-income unit may not exceed 30% of the imputed income limit applicable to such unit size.
6.1.4	If the household pays any utilities (excluding telephone, cable television or internet), an appropriate utility allowance must be subtracted from the gross rent limit to determine the maximum net rent chargeable. These amounts must be confirmed by calculating maximum rents individually.
6.1.5	Developments must comply with LIHTC program requirements for a minimum of 30 years, beginning with the taxable year in which the development is placed in service or, at the election of the taxpayer, the succeeding taxable year.
6.1.6	Developments must comply with Virginia Housing's Minimum Design and Guidelines.

#	Minimum Requirement
6.1.7	In Virginia, rehab developments must incur a minimum of $15,000 of contractor construction rehab expenditures, on average, per unit in order to qualify for credits.
6.1.8	In Virginia, developments financed with tax-exempt bonds must incur a minimum of $10,000 of contractor construction rehab expenditures, on average, per unit in order to qualify for 4% credits.
6.1.9	The Management company that will be used for the development must be a Virginia Housing Certified Property Manager by time of 8609 issuance.
6.1.10	Unless prohibited by an applicable federal subsidy program, each applicant shall commit in the application to provide a leasing preference to individuals (i) in a target population identified in a memorandum of understanding between the Authority and one or more participating agencies of the Commonwealth, (ii) having a voucher or other binding commitment for rental assistance from the Commonwealth, and (iii) referred to the development by a referring agent approved by the Authority. The leasing preference shall not be applied to more than ten percent (10%) of the units in the development at any given time. The applicant may not impose tenant selection criteria or leasing terms with respect to individuals receiving this preference that are more restrictive than the applicant's tenant selection criteria or leasing terms applicable to prospective tenants in the development that do not receive this preference, the eligibility criteria for the rental assistance from the Commonwealth, or any eligibility criteria contained in a memorandum of understanding between the Authority and one or more participating agencies of the Commonwealth.
6.1.11	Applicants receiving credits must waive their right to pursue a Qualified Contract (QC). Any principals participating in a deal that is currently pursuing a QC in Virginia are not eligible for an allocation of credits (9% or 4%). Any principals participating in a deal that is currently pursuing a planned foreclosure in Virginia are not eligible for an allocation of credits (9% or 4%).
6.1.12	All developments must meet a baseline energy performance requirement: • New Construction – Energy Star Certification • Rehab - 30% performance increase over existing based on HERS Index or evidence of a HERS index of 80 or better • Adaptive reuse – Must evidence a HERS index of 95 or better All requirements must be verified by a third party, independent, non-affiliated certified RESNET rater; rater must be certified by a provider found on the Virginia Housing Certified Provider list. All Raters must submit to the owner, to be included in the application, a signed Virginia Housing RESNET Rater form and a HERS report from an energy rating software program listed on the National Registry of Accredited Rating Software Programs. All raters certifying a property for Virginia LIHTC must be authorized to conduct business in Virginia and have completed 500+ ratings. See Appendix for additional information on this requirement. **Note: The HERS report should be completed for the whole development and not an individual unit. The HERS report should show both baseline HERS and expected target score at Reservation, not just 8609.**

6.2. Compliance Monitoring

The Omnibus Budget Reconciliation Act of 1990 amended the IRC to require that state tax credit allocating agencies provide a procedure for monitoring developments for non-compliance with the requirements of the Program under IRC §42(m)(1)(B) and for notifying the Internal Revenue Service of such non-compliance. To offset the costs of compliance monitoring, Virginia Housing charges a reasonable monitoring fee, as allowed by the IRC. Virginia Housing is required by the IRC to monitor developments for compliance with the program requirements and report all non-compliance to the IRS using Form 8823. The Appendix includes additional information regarding ongoing compliance monitoring.

The QAP mandates that all procedures and requirements in the IRC must be complied with and satisfied. The QAP further recites that federal law requires Virginia Housing to monitor developments receiving credits for compliance with the requirements of §42 of the IRC. In furtherance of that mandate, Virginia Housing supplements the QAP, effective January 1, 2021, to provide that Virginia Housing will monitor compliance, as required by Section 1.42–5 of the federal Income Tax Regulations, in accordance with final regulations published February 26, 2019, in the Federal Register (84 FR 6076) https://www.federalregister.gov/documents/2019/02/26/2019-03388/amendments-to-the-low-income-housing-credit-compliance-monitoring-regulations , as amended by proposed regulations published July 7, 2020, in the Federal Register (85 FR 40610) https://www.govinfo.gov/content/pkg/FR-2020-07-07/pdf/2020-14555.pdf.

7. LIHTC Application Information

The following sections provide guidance and additional information needed to complete and submit an application for tax credits.

7.1. Reservation Application for 9% Credits

The application can be found on our website, Virginia Housing.com/LIHTC Program. The Tax Credit Application prepared using Microsoft Office 2016.

NOTE: If the development is a mixed construction development, a mixed construction application must be requested from Virginia Housing and completed by the established deadline.

7.2. Reservation Specifications

The following specifications must be incorporated into an application for Low Income Housing Tax Credits. Documentation must be submitted with the application to support any variations from these specifications.

#	Specification	Description
7.2.1	Bathroom Count	All new construction 2-bedroom units must have 1.5 bathrooms and all new construction units with 3 or more bedrooms must have at least 2 full bathrooms.
7.2.2	Revenue	Within the Unit Mix grid, add a line item for each different unit floor plan configuration and rent target for this development. Rents should not include utility allowance.
7.2.3	Vacancy	Use either 7% of gross potential income or market vacancy. Documentation must be submitted to support market vacancy if less than 7%.
7.2.4	Operating Expenses	Per Unit Operating Expenses must be at least $4,500 per unit excluding replacement reserves and assuming the tenant is paying own utilities. The pro forma operating expenses increase is greater than or equal to 3% for purposes of calculating Projections for Financial Feasibility.
7.2.5	Replacement Reserves	Minimum replacement reserves should equal $250 per unit for new construction and elderly developments and $300 per unit for all other developments.
7.2.6	Pro forma Rent Increases	The pro forma rent increase is less than or equal to 2% per year for purposes of calculating Projections for Financial Feasibility.
7.2.7	Debt Coverage Ratio	A minimum of 1.15 in year one is preferred.

#	Specification	Description
7.2.8	Cost Limits	Total development costs per square foot will be compared to the applicable cost limits for the allocation year.
7.2.9	Contractor Cost	Applications relating to rehab of existing residential units must propose hard construction costs of at least $10,000 per unit (if financed with tax-exempt bonds) or $15,000 per unit (for all other developments).
7.2.10	Builder's Overhead, Profit and General Requirements	In total, these must not exceed 14% of the construction cost excluding bonds and building permits.
7.2.11	Operating Reserve	Use a minimum of 6 months of operating expenses **and** debt service.
7.2.12	Tax Credit Equity Factor	This generally does not include syndication, legal, accounting, overhead, sales commissions and/or required reserves. The Applicant will determine the amount appropriate for the development.
7.2.13	Deferred Developer Fee Loan	If deferring more than 50% of the developer fee, the application must include the proposed deferred developer fee loan amount evidencing that the property can support the repayment within 15 years in the cash flow analysis on a form provided by developer. Note: Documentation must be provided clearly showing the deferred developer fee is bona fide debt; this may include a Note or other documentation as approved by the Authority and will be accepted up to 8609 issuance.

7.3. Developer Fee Calculation

The maximum developer's fee will be the lesser of the following calculations:

#	Description
7.3.1	Acquisition: Less than or equal to 10% of the building's acquisition cost, excluding the developer's fee. No developer's fee will be allowed on the acquisition basis in cases where there is an identity of interest between the purchaser and seller. In addition, the building acquisition portion of the developer fee for all Rural Development developments will not exceed 8%, **PLUS** Rehab: Less than or equal to 25% of the building's eligible basis arising from the rehab, excluding the developer's fee, **OR** New Construction: Less than or equal to 20% of the building's eligible basis, excluding the developer's fee.
7.3.2	Less than or equal to 15% of the total development costs
7.3.3	For developers with a related entity contractor, the maximum developer's fee shall not exceed the total development costs, less the contractor's overhead, profit and any incentive payments.
7.3.4	For developers with a related architectural entity, the maximum developer's fee shall not exceed the total development costs, less the architectural and engineering fees.
7.3.5	For developers with both a related architectural entity and a related contractor entity, the maximum developer's fee shall not exceed the total development costs, less the total development costs exclusive of the developer fee, less the contractor's overhead, profit, any incentive payments and all architectural and engineering fees.
7.3.6	A cumulating declining scale, as follows: •15% if less than $1 million total development costs, plus •12% if between $1 million and $10 million total development costs, plus 8% if greater than $10 million total development costs

Notwithstanding the existing calculation of developer's fee, (i) no more than $3 mm of developer's fee may be included in the development's eligible basis, (ii) no developer's fee may exceed $5 mm, and (iii) no developer's fee may exceed 15% of the development's total development cost. See Appendix for additional information regarding developer fee calculations and requirements.

NOTE: A draft form of the developer fee agreement must be submitted with the Reservation application.

7.4. Reservation Criteria

The following summary is an attempt to provide a more complete explanation of Application criteria, answer frequently asked questions, supply expanded details related to Virginia Housing's intent in requesting documentation, as well as to detail the methods of calculation.

This summary should not be considered a replacement for, but rather a supplement to the QAP, which in the case of discrepancies will be the overriding document.

#	Description
7.4.1	Increase to Eligible Basis is allowed under the following circumstances:
7.4.1.a	The development is located in a HUD-designated qualified census tract (QCT) or difficult to develop area (DDA). (30% increase available to both 9% and 4% deals)
7.4.1.b	The development includes Permanent Supportive Housing (PSH). PSH is housing consisting of units designated for individuals or families that are homeless, at-risk of homelessness or who have multiple barriers to independent living. (30% increase only available to 9% deals)
7.4.1.c	If revitalization points are awarded. (30% increase only available to 9% deals)
7.4.1.d	If the development obtains an additional green certification over the baseline requirement. (10% increase only available to 9% deals)

Basis boosts may be subject to removal at 8609 if feasibility determines they are not needed.

NOTE: The maximum increase in eligible basis any development can receive is 30%. Tax Exempt Bond credit deals will only qualify for a 30% increase in basis if the development is located in a HUD designated QCT or DDA.

#	Criteria	Description
7.4.2	Determining Total # of Rental Units in Development	Exclude units from rental unit count that will not be rented to qualified households (e.g. manager's unit or a unit to be used continuously as a model).
7.4.3	Minimum Design and Construction Requirements Note: Each deal receiving a reservation will be subject to a pre-construction meeting where these will be reviewed with the development team.	VH's Minimum Design & Construction Requirements (MDCR) are mandatory minimum design criteria for any development receiving tax credits and/or VH financing. Whether financing with VH or not, construction will be monitored periodically to ensure requirements are being met. In the event the plans and specifications and/or work write-up do not include Virginia Housing Minimum Design and Construction Requirements, then those requirements must still must be met, even though the application is accepted for credits. Not doing so may cause the Application to be ineligible for credits.

#	Criteria	Description
7.4.4	Set-Aside Elections	The selections made in this category are used to determine the lower rent bonus points.
7.4.5	Operating Budget	Revenue should be projected for the date the buildings are anticipated to be placed in service and using rents not greater than the current maximums. Use HAP rents where applicable.

7.5. Reservation Application Mandatory Items

The following are mandatory documents that must be submitted with the application. Mandatory items that are not submitted with the application or that need to be corrected will be assessed a penalty. If the mandatory items are not submitted or corrected within the timeframe specified in the penalty notification the application will be disqualified. Please refer to the Submission Checklist for correct tab placement.

#	Mandatory Document	Description
7.5.1	Electronic Copy of Application and Attachments (Procorem)	Use Virginia Housing tab dividers to separate attachments.
7.5.2	$1,000 Application Fee	Must be paid via check, ACH, or wire to VH prior to application deadline. The process for submitting payments is in Section 12.2.
7.5.3	Partnership or Operating Agreement Note: Must include an organization chart.	In addition to the Agreement itself, attach an organization chart for the limited partnership (LP) or LLC depicting the ownership structure, identifying each principal **(i.e. individuals' names rather than entities)** and percentage of interest. For a housing authority or non-profit principal, the Executive Director should be the named individual.
7.5.4	Virginia State Corporation Commission Certification (SCC)	Submit a Certification from the Virginia SCC reflecting the ownership entity is admitted to record in Virginia and is authorized to transact business in Virginia.

#	Mandatory Document	Description
7.5.5	Principal's Previous Participation Certification (PPC)	Information provided in the PPC form and representations made in the ownership section of the Application will be used to enforce the limit on the amount of credits that are reserved for a single sponsor. No more than 15% of the per capita credit amount may be reserved to any party or related parties, either directly or indirectly, in any credit year.
7.5.6	Site Control Documentation	Site control must be in the name of the tax credit ownership entity identified in the Application and documented to remain in place for a minimum of four (4) months beyond the Reservation Application Deadline (9% competitive credits only). The site control document must reference all parcels in the development and should not allow further marketing of the property by the seller. If the purchase price is determined by the assumption of a loan, provide documentation to support the outstanding loan amount. **All applications must include a copy of the most current real estate tax assessment.**
7.5.7	Third-Party RESNET Rater Certification Note: A 200 unit building would receive credit as a 200 rating. A multifamily development would receive one rating per unit.	**All requirements must be verified by a third party, independent, non-affiliated certified RESNET rater; rater must be certified by a provider found on the Virginia Housing Certified Provider list. All Raters must submit to the owner, to be included in the application, a signed Virginia Housing RESNET Rater form and a HERS report from an energy rating software program listed on the National Registry of Accredited Rating Software Programs. All raters certifying a property for Virginia LIHTC must be authorized to conduct business in Virginia and have completed 500+ ratings. See Appendix for additional information on this requirement.**
7.5.8	Attorney's Opinion (Virginia Housing form)	Any changes to the Opinion form other than filling in blanks or making the appropriate selections in bracketed language must be submitted and approved prior to application submission. Altered Opinions submitted without prior approval are subject to a penalty. The date in the first paragraph of the Attorney's Opinion Letter must correspond to the date of the Application or later. Include a copy of the approved black-lined version and approval e-mail, in addition to the executed form.

#	Mandatory Document	Description
7.5.9	Non-Profit Questionnaire (if Applicant/Developer or recipient of ROFR is a Non-Profit Organization)	If applicant is eligible to compete in the Non-Profit Pool and/or receive points for non-profit involvement, applicant must submit the completed questionnaire and consulting agreements, if applicable.
7.5.10	Appraisal	Appraisals are not required for New Construction or Acquisition Rehab/Adaptive Reuse where acquisition credits are not being requested (however, it may be requested at Virginia Housing's discretion).
7.5.11	Locality Notification Information form (online submission)	Applicant must complete Virginia Housing's online LNI form. **Note:** Slight discrepancies between the LNI and the application will not result in penalties. (LNI TUTORIAL)
7.5.12	Market Study	Virginia Housing Market Study Guidelines are included in the Market study information in application must match information included in the final market study. Approved market analysts are required to be a member of the National Council of Housing Market Analysts (NCHMA). See Criteria for approved market analyst listing. The application may be subject to penalty if (1) the market study is not provided with the application and/or; (2) if the market study does not meet current market study guidelines.
7.5.13	Zoning Certification	The appropriate locality official or professional civil engineer registered in Virginia must certify proper zoning, without substantive modification and no earlier than three months before the Application Deadline. If the proposed site overlaps the boundary between multiple political jurisdictions, Virginia Housing will accept (1) a Certification form from each locality or (2) a letter from one locality specifying that the other locality has jurisdiction.

#	Mandatory Document	Description
7.5.14	Plans and Specifications	Virginia Housing must receive copies of Plans and Specs via Procorem site. A Unit-by-Unit write-up is required for all rehab deals at the time of reservation application. In the event the plans and specifications do not include Virginia Housing Minimum Design and Construction then those requirements still must be met, if the Application is accepted for credits. However, leaving out these requirements may also cause the Application to be ineligible for credits or have penalty points assessed for resubmittals. The Authority reserves the right to require a complete A & E review prior to awarding credits in the event that it is deemed necessary.
7.5.15	Environmental Site Assessment (Phase I)	Each 4% tax credit application must include an environmental site assessment (Phase I). Additional reports/documentation may be requested, if applicable.
7.5.16	Relocation Assistance Plan	A Relocation Assistance Plan is required any time residents will be displaced as well as rehabs in place. Owners are required to submit a Relocation Plan to Virginia Tax Credit Allocation Department with the Reservation Application, if applicable.
7.5.17	Physical Needs Assessment	A Physical Needs Assessment must be submitted with the reservation application for all 4% deals.
7.5.18	Existing Conditions Questionnaire	An Existing Conditions Questionnaire must be submitted with the reservation application for all 9% and 4% deals.

7.6. Project Readiness—Point Items

The following is meant to provide a better understanding of the Project Readiness point items that may be selected in the application. Refer to the Submission Checklist for correct tab placement.

Project Readiness			
#	**Point Category**	**Points**	**Explanation**
7.6.1	Locality CEO Letter	0 or -25	Receiving a letter in support or a 'no comment' from the locality will qualify the application for 0 points. VH will consider an opposition letter if it is accompanied by a legal opinion from the locality's attorney, opining that the locality's opposition to the proposed development does not have a discriminatory intent or effect that is in violation of the Fair Housing Act and the HUD implementing regulations, as described in 24 CFR §100.500(a) and 24 CFR §100.500(b).

Project Readiness			
#	**Point Category**	**Points**	**Explanation**
7.6.2	Plan of Development **NOTE:** Applicants that are receiving 50 points under the "Developer Experience" section below are not eligible for Plan of Development points.	0 or 40	Submit with the Reservation Application, Virginia Housing's Plan of Development Certification form, executed by the local official authorized to sign off on the Plan of Development, that certifies that the locality has an approved final plan of development or site plan for the site (for which credits are being requested) and no further plan of development or site plan approval is required before issuance of a building permit **or** that the proposed development is an existing development with proposed renovations and no additional plan of development approval is needed. If the proposed site overlaps the boundary between two political jurisdictions, provide a Plan of Development Certification form from both localities or a letter from one locality specifying that the other would have jurisdiction.

Project Readiness			
#	**Point Category**	**Points**	**Explanation**
7.6.3	Location In A Revitalization Area	0, 10, or 15	Any proposed development that is to be located in a revitalization area meeting the requirements of Virginia Code 36-55.30:2 or within a state designated Opportunity Zone **with** a binding commitment from an Opportunity Zone fund/investor. • 10 points for census tracts deemed eligible without a resolution; • 15 points for developments located within an established revitalization area or Housing Rehabilitation Zone as evidenced through a local ordinance/resolution; • or, 15 points within a state designated Opportunity Zone with a binding commitment (see Appendix).

7.7. Housing Needs Characteristics—Point Items

The following is meant to provide a better understanding of the Housing Needs Characteristics point items that may be selected in the application. Refer to the Submission Checklist for correct tab placement.

Housing Needs Characteristics			
#	**Point Category**	**Points**	**Explanation**
7.7.1	Sec 8 or PHA Waiting List Preference	Up to 5	Points will be awarded to a development whereby less than 100% of the units are subject to Section 8 project-based assistance and where leasing preference is given to households on the local public housing or Section 8 waiting lists (maintained by the locality or the nearest Section 8 administrator for the locality in which the proposed development is to be located). Points are pro-rated for a development wherein fewer than 100% of its units have project-based assistance.
7.7.2	**Existing** RD, HUD Section 8 or 236 Program **NOTE:** May apply to new construction if an existing RD or HUD contract is being bifurcated.	0 or 20	The development must be subject to Rural Development or HUD Section 8 or 236 programs at the time of Application, including program participation. However, if the Applicant is the current owner or has any common interests with the current owner, either directly or indirectly, points will only be awarded if the Applicant waives all rights to any developer's fee associated with the acquisition of the development. The preceding condition may be waived by Virginia Housing for good cause. Waiver must be granted prior to Application submission.

Housing Needs Characteristics			
#	**Point Category**	**Points**	**Explanation**
7.7.3	Subsidized Funding Commitments	Up to 40	The subsidized funding point category has been broadened to include a wider range of funding sources and also provides that the receipt of such funding will be confirmed prior to the Authority's issuance of IRS form 8609 at completion of the development.
7.7.4	Tax Abatement	0 or 5	The development must qualify for a deferral on a portion of real estate tax increases (a real estate tax abatement) as authorized by the Code of Virginia, § 58.1-3219. Local or state subsidy is not eligible for these points.
7.7.5	New Project-Based Rental Subsidy (HUD or RD)	0 or 10	New project-based subsidy must be awarded from HUD, Rural Development or statewide rental assistance for the greater of 5 units or 10% of the total units of the proposed property.
7.7.6	High Opportunity Census Tract	0, 20, 25, or 30	If the census tract where the development is located has: •less than 12% poverty - 20 points will be awarded •less than 10% poverty - 25 points will be awarded • less than 3% poverty - 30 points will be awarded
7.7.7	Rural Development – "High Priority"	0 or 15	The development must be listed on USDA RD's High Priority List at the time that the Reservation Application is submitted to Virginia Housing.

Housing Needs Characteristics			
#	**Point Category**	**Points**	**Explanation**
7.7.8	Areas with Little or No Increase In Rent Burdened Population Note: Any waiver request for these negative points must be submitted prior to the Reservation application.	Up to -20	Any proposed new construction development (including adaptive re-use and rehabilitation that creates additional rental space) that is located in an area identified by VH as an area with little or no increase in rent-burdened population will be assessed up to negative 20 points, depending upon the portion of the development that is additional rental space. This penalty applies to all Pools, except the At-Large Pool. Applications receive 0 points for this category in the At-Large Pool.
7.7.9	Areas with An Increasing Rent Burdened Population	Up to 20	Any proposed new construction development (including adaptive re-use and rehabilitation that creates additional rental space) and that is located in an area identified by VH as an area with an increasing rent burdened population will be eligible for these points. Applications receive 0 points for this point category in the At-Large Pool.

7.8. Development Characteristics—Point Items

The following is meant to provide a better understanding of the Development Characteristics point items that may be selected in the application. Refer to the Submission Checklist for correct tab placement. Point items are listed in the order that they are presented in the application Scoresheet.

Development Characteristics				
#	**Point Category**		**Points**	**Explanation**
7.8.1	**Amenities**			
	7.8.1.a.	Community/ Meeting Room	0 or 5	The development has a community room with a minimum of 749 sq. ft. and complies with use guidelines.

Development Characteristics				
#	**Point Category**		**Points**	**Explanation**
	7.8.1.b.	Brick Walls or other similar low-maintenance material	Up to 25	Exterior walls are constructed using brick or other similar low-maintenance material approved by the Authority covering 25% or greater, up to and including 85% of the exterior walls of the development.
	7.8.1.c.	Sub-metered Water Expense	0 or 5	Every unit in the development will be sub-metered with equipment capturing/measuring 100% of the water used in the unit (not just hot water usage) and households must pay the water provider directly to be eligible for these points. The water provider may be a third party utility collections company. If the locality does not allow water sub-metering OR if the household will not be paying the water provider directly, the Applicant does not qualify for these points.
	7.8.1.d.	WaterSense Toilets, Faucets & Showerheads	0 or 3	Every unit in the development will have bathroom(s) containing only WaterSense labeled toilets, faucets and showerheads. Points only apply if additional green certifications are not obtained.
	7.8.1.e.	High Speed Internet/Broadband	0 or 1	Each unit will be provided with the necessary infrastructure for high-speed or broadband internet service.
	7.8.1.f.	Bath Fans	0 or 3	Each full bathroom will include: • A bath fan wired to primary light with delayed timer; OR • A bath fan with humidistat.
	7.8.1.g.	USB Ports	0 or 1	In all units, minimum one USB charging port, will be provided in Kitchen, Living room and all bedrooms.
	7.8.1.h.	LED Kitchen Lighting	0 or 2	All Kitchen light fixtures are LED and will meet the MDCR lighting guidelines.

Development Characteristics				
#	**Point Category**		**Points**	**Explanation**
	7.8.1.i.	Solid Core Doors	0 or 3	All interior doors within apartment will be solid core. Solid wood doors will meet this requirement.
	7.8.1.j.	Free individual Wi-Fi	0 or 8	Wi-Fi internet service will be provided for all units. **Must provide a resident internet education information, draft resident acknowledgment form, and internet security plan at time of application.** Resident education and form must be included in all resident files.
	7.8.1.k.	Broadband/high-speed internet service will be provided for all units	0 or 6	**Must provide a resident internet education information, draft resident acknowledgment form, and internet security plan at time of application.** Resident education and form must be included in all resident files.
	7.8.1.l.	Free community room Wi-Fi restricted to development residents	0 or 4	Service is required to have a rotating password and only accessible to residents. **Application must include resident internet education information, draft resident acknowledgment form and internet security plan at time of application.** Resident education information and draft resident acknowledgment form must be included in all resident files.
	7.8.1.m.	Balconies- New Construction only	0 or 4	Each unit will have balcony or patio with a minimum depth 5’ clear from the face of building. Minimum 30 square feet clear area. All balconies are to follow applicable accessibility standards.
	7.8.1.n.	Outside unit entry ledge	0 or 2	Shelf or ledge outside each unit entry door located in an interior hallway. Must have capacity to hold 50 pounds or more. Size and design must allow for temporary storage of items, must include hooks and do not obstruct accessible route. Unit entry ledges must be at 48” maximum above finished floor.

Development Characteristics				
#	**Point Category**		**Points**	**Explanation**
	7.8.1.o.	Dehumidification	0, 2 or 5	Rehab only- Each apartment has dedicated space, drain and electrical hookups to accept a permanently installed dehumidification system, OR All development types- Each Unit is equipped with a permanent dehumidification system
	7.8.1.p.	Fire Prevention or Suppression	0,2, or 4	All cooking surfaces will be equipped with fire prevention or suppression features for the duration of the compliance period that meet Virginia Housing's requirements below: • All units will have ranges to be certified to UL858 standards or features limiting the high end temperature of the stovetop below the auto-ignition point of most cooking oils (4 Pts); OR • All unit kitchens to include over the range fire suppression features such as canisters, etc. (2 Pts)
	7.8.1.q.	ELDERLY ONLY: Front-Control Ranges	0 or 1	Every unit in the development will have a cooking range with front controls
	7.8.1.r.	ELDERLY ONLY: Independent/ Supplemental Heat Source	0 or 1	All full bathrooms in the development will have an independent or supplemental heat source, in addition to the unit's standard HVAC system.
	7.8.1.s.	ELDERLY ONLY: Two Eye Viewers	0 or 1	Every unit in the development will have an entrance door with two eye viewers, one at 42" and the other at standard height.

Development Characteristics			
#	**Point Category**	**Points**	**Explanation**
7.8.2	Federal Project-Based Rental Subsidy and Units for Persons with Disabilities – Unit Accessibility Note: Must include a Marketing Plan that meets VH's marketing requirements. All Accessible features must be permanent.	0 or 60	The greater of 5 units or 10% of the units will be assisted by HUD project-based vouchers. Units must also conform to HUD regulations interpreting the accessibility requirements of section 504 of the Rehabilitation Act for 5 or 10% of the units and be actively marketed to persons with disabilities as defined in the Fair Housing Act. Must include roll-in showers with permanent grab-bars and fixed seats. See Appendix G.2 for marketing requirements.
7.8.3	HUD 504 Accessibility – 5 or 10% of Units Note: Must include a Marketing Plan that meets VH 's marketing requirements. All Accessible features must be permanent.	0 or 30	The greater of 5 units or 10% of the units (i) will have rents within HUD's Housing Choice Voucher ("HCV") payment standard; (ii) conform to HUD regulations interpreting the accessibility requirements of section 504 of the Rehabilitation Act for 5 or 10% of the units and be actively marketed to persons with disabilities as defined in the Fair Housing Act. See Appendix G.2 for marketing requirements.
7.8.4	HUD 504 Accessibility – 5% of Units Note: Must include a Marketing Plan that meets VH's marketing requirements. All Accessible features must be permanent.	0 or 15	Five percent (5%) of the units will conform to HUD regulations interpreting the accessibility requirements of section 504 of the Rehabilitation Act for 5 or 10% of the units and be actively marketed to persons with disabilities as defined in the Fair Housing Act. See Appendix G.2 for marketing requirements.

Development Characteristics			
#	**Point Category**	**Points**	**Explanation**
7.8.5	Proximity to Public Transportation	0, 10 or 20	The development must be located within ½ mile of an existing commuter rail, light rail or subway station or ¼ mile of an existing public bus stop to be eligible for these points. (10 points) If the development meets the above qualifications and is competing within the New Construction, Northern Virginia/Planning District 8, or Tidewater MSA pools, it will receive 20 points. No points will be assessed for deals in the LHA pool. **Note:** On-call transportation for elderly developments will qualify for points.
7.8.6	Green Certifications	0 or 10	Green Certification options: • EarthCraft Gold • LEED • NGBS Silver or higher • Enterprise Green Communities • Zero Energy Ready Home (future points)
7.8.7	Units Constructed to Meet Virginia Housing's Universal Design Guidelines	Up to 15	Points will be awarded on a prorated % basis for the number of units meeting this criterion in a General development. **Mandatory:** Elderly Developments must have 100% of the units meet this criterion in order to qualify for the points. It is mandatory that the Architect of Record attend Virginia Housing Universal Design training. Training must have occurred within the last 5 years or later. The Architect of Record must be listed on Virginia Housing's most current **Universal Design Certificate Holders' listing** and must sign the Virginia Housing Architect's Certification.

Development Characteristics			
#	**Point Category**	**Points**	**Explanation**
7.8.8	Historic Rehab	0 or 5	The Structure must be listed individually in the National Register of Historic Places or be located in a registered historic district and certified by the Secretary of the Interior as being of historical significance to the district and the rehab must be completed in such a manner as to be eligible for historic rehab tax credits. Evidence that the Part I has been approved by the Department of Historic Resources must be submitted with the application.

7.9. Tenant Characteristics—Point Items

The following is meant to provide a better understanding of the Tenant Population Characteristics point items that may be selected in the application. Refer to the Submission Checklist for correct tab placement.

Tenant Population Characteristics			
#	**Point Category**	**Points**	**Explanation**
7.9.1	No More Than 20% Of Units with One Bedroom or Less	0 or 15	The development will have no more than 20% of its units with one bedroom or less.
7.9.2	% of Units with 3 or More Bedrooms	Up to 15	These points only apply to developments eligible for the points associated with the point category 'No More Than 20% Of Units with One Bedroom or Less.' An additional 0.75 points will be awarded for each percent of the low-income units in the development with three or more bedrooms.

Tenant Population Characteristics			
#	**Point Category**	**Points**	**Explanation**
7.9.3	LIHTC Units that are income and occupancy-restricted to at or below 30% of AMI	Up to 10	For each percentage point of units in the proposed development that are both rent-restricted to and occupied by households at or below 30% of AMGI that are not subsidized by project-based rental assistance, one point will be assessed.
7.9.4	LIHTC Units that are income and occupancy-restricted to at or below 40% of AMI	Up to 10	For each percentage point of units in the proposed development that are both rent-restricted to and occupied by households at or below 40% of AMGI, one point will be assessed.
7.9.5	LIHTC Units that are income and occupancy-restricted to at or below 50% of AMI	Up to 50	The Applicant must commit to impose income limits on the low-income housing units throughout the extended use period (as defined in the IRC) below those required by the IRC in order for the development to be a qualified low-income development. Points will be assessed based on the percentage of housing units in the proposed development both rent-restricted to and occupied by households at or below 50% AMGI.
7.9.6	LIHTC Units that are rent-restricted	Up to 25	The Applicant must commit to impose rent limits on the low-income housing units throughout the extended use period (as defined in the IRC) below those required by the IRC in order for the development to be a qualified low-income development.

Tenant Population Characteristics			
#	**Point Category**	**Points**	**Explanation**
7.9.7	Developments in "Low-Income Jurisdictions" - Units that are rent-restricted at or below 50% of the AMGI and income-restricted at or below 60% of the AMGI	Up to 50	The Applicant must commit to impose rent limits on the low-income housing units throughout the extended use period (as defined in the IRC) below those required by the IRC in order for the development to be a qualified low-income development. "Low-income jurisdiction" means any city and county in the Commonwealth with an area median income at or below the Virginia non-metro area median income established by the U. S. Department of Housing and Urban Development ("HUD").

7.10. Sponsor Characteristics—Point Items

The following is meant to provide a better understanding of the Sponsor Characteristics point items that may be selected in the application. Refer to the Submission Checklist for correct tab placement.

Sponsor Characteristics			
#	**Point Category**	**Points**	**Explanation**
7.10.1	Developer Experience-Option #1 NOTE: Applications receiving points under either 50-point category are not eligible for Plan of Development points under the "Readiness" section above. See website for updated Developer Experience list.	0 or 50	Evidence that the controlling general partner or managing member, of the proposed development has/have developed, as controlling general partner or managing member (i) at least 3 LIHTC developments that contain at least 3x the number of housing units in the proposed development (can include market units); **OR** The developer must submit evidence that the controlling general partner or managing member, of the proposed development has developed, as controlling general partner or managing member at least six LIHTC developments.
7.10.2	Developer Experience-Option #2	0 or 50	The developer must submit evidence that the principal requesting points has developed at least three LIHTC developments and has at least $500,000 in liquid assets.

Sponsor Characteristics			
#	**Point Category**	**Points**	**Explanation**
7.10.3	Developer Experience-Option #3	0 or 10	The developer must submit evidence that the controlling general partner or managing member of the proposed development has/have developed, as controlling general partner or managing member, at least one LIHTC development that contains at least the number of housing units in the proposed development (can include market units).
7.10.4	Developer Experience - Uncorrected Life Threatening Hazard	0 or -50	This penalty will apply to any applicant that includes a principal that was a principal in a development at the time the Authority inspected such development and discovered a life threatening hazard under HUD's Uniform Physical Condition Standards and such hazard was not corrected in the time frame established by the Authority.

Sponsor Characteristics			
#	**Point Category**	**Points**	**Explanation**
7.10.5	Developer Experience-Uncorrected Form 8823 to IRS (non-compliance)	0 or -15	This penalty will apply to any Applicant that includes a principal who was a principal in a development that either (i) at the time Virginia Housing reported such development to the IRS for non-compliance had not corrected it by the time a Form 8823 was filed by Virginia Housing or (ii) remained out-of-compliance with the terms of its extended use commitment after notice and expiration of any cure period set by Virginia Housing. Penalty points for Uncorrected 8823s (non-compliance) will apply, unless developer requests and Virginia Housing determines that individuals associated with the principal attend Virginia Housing-authorized compliance training prior to Application deadline.
7.10.6	Developer Experience-Principal Who Did Not Build As Represented	-2x	This penalty will apply if the application includes a principal who, in a previous application, did not build a development as represented in the Application for credit. The penalty, -2x the number of points assigned to the item(s) not built will apply for a period of three years after the last Form 8609 is issued for the development and is in addition to any other penalties Virginia Housing may seek under its agreements with the Applicant.

Sponsor Characteristics			
#	**Point Category**	**Points**	**Explanation**
7.10.7	Developer Experience- Principal Who Failed to Provide a Minimum Building Requirement as Required in a Previous Application	0 or -20	This penalty will apply if the application includes a principal who, in a previous application, did not provide either a minimum building requirement as defined in Minimum Design & Construction Requirements or required non-point item as referenced in the Tax Credit Application. A 20 point penalty will apply for three years after the issuance date of the last Form 8609 and is in addition to any other penalties Virginia Housing may seek under it's agreements with the Applicant.
7.10.8	Developer Experience- Principal Who Had Credits Terminated by Virginia Housing	0 or -10	This penalty will apply if the application includes a principal who, in a previous application, had a reservation of credits involuntarily terminated by Virginia Housing. A 10-point penalty will apply for three years years after the credits are returned to Virginia Housing and is in addition to any other penalties Virginia Housing may seek with the Applicant.
7.10.9	Developer Experience- Exceeding Cost Limits	0 or -50	This penalty will apply if the application includes a principal that was a principal in a development for which the actual cost of construction exceeded the applicable cost limit by 5% or more (-50 points for a period of 3 calendar years beginning January 1 of the year following the completion of the cost certification). If the Board of Commissioners determines that exceeding the cost limit by more than 5% was outside the applicant's control based upon documented extenuating circumstances then no negative points.

Sponsor Characteristics			
#	**Point Category**	**Points**	**Explanation**
7.10.10	Developer Experience- More than Two Requests for Final Inspection	0 or -5	This penalty will apply if the application includes a principal who, in a previous application had more than two requests for final inspection. Negative 5 points will apply beginning the year after the prior application incurred the penalty and continue for two years.
7.10.11	Management Company Rated Unsatisfactory by Virginia Housing	0 or -25	If the ownership of any Applicant includes a principal, who in a previous application hired a management company to manage a tax credit development, after such management company received an "unsatisfactory" rating from VH during the compliance and extended use periods of such development.
7.10.12	Developer Experience- Requesting a Qualified Contract	Disqualified	Beginning January 1, 2019, any applicant that includes a principal that has pursued a Qualified Contract in Virginia will be disqualified.

7.11. Efficient Use of Resources

The following is meant to provide a better understanding of the Efficient Use of Resources point items that will be calculated in the application.

Efficient Use of Resources			
#	**Point Category**	**Points**	**Explanation**
7.11.1	Credit Per Unit	Up to 200	Up to 200 points will be awarded based on the percentage by which the total amount of credits, per low-income housing unit type, for a given property, is less than the highest per-unit-type credit amount. This is an automatic calculation in the application.
7.11.2	Cost Per Unit	Up to 100	Up to 100 points will be awarded based on the percentage by which the cost per low-income housing unit type for a given property is less than the highest per unit type cost. This is an automatic calculation in the application.

7.12. Bonus Point Items

The following is meant to provide a better understanding of the Bonus point items that may be selected in the application. Refer to the Submission Checklist for correct tab placement.

Bonus Points			
#	**Point Category**	**Points**	**Explanation**
7.12.1	Extended Use Restriction	40 or 50	Applications documenting that the owner will maintain the low-income units in compliance for 10 years over the standard 30-year extended use period (40 years of total compliance)- 40 points; OR Applications documenting that the owner will maintain the low-income units in compliance for 20 years over the standard 30-year extended use period (50 years of total compliance)- 50 points.
7.12.2	Non-Profit or Local Housing Authority (LHA) Purchase Option NOTE: If points are requested for extended compliance above, no points will be awarded for a purchase option or right of first refusal.	0 or 60	The Purchase Option or Right of First Refusal must be signed and notarized by both the applicant and the participating non-profit. If, during the document review and scoring process, Virginia Housing determines that the non-profit or LHA is not qualified, the Applicant may submit a request to select one of the extended compliance options and Virginia Housing may award the appropriate points. The qualified non-profit must have a minimum of 10% ownership in the general partnership or managing member for the full 15-year compliance period to qualify for these points. LHAs are not subject to the 10% ownership requirement.

Bonus Points			
#	**Point Category**	**Points**	**Explanation**
7.12.3	Homeownership Option	0 or 5	The local housing authority (LHA) LHA or qualified non-profit commits to sell the units in the development to tenants. This category is limited to properties with detached single-family homes on individual lots that are not part of a homeownership association with mandatory dues. Points under this category are not available to applicants receiving points for extended compliance.
7.12.4	9% Developments with 4% Bond Funding	25,35, or 45	Developments funded with 9% Tax Credits that are also funded with 4% Tax Exempt Bonds: • 30% of Aggregate units funded by Tax-Exempt Bonds (25 Points) • 40% of Aggregate units funded by Tax-Exempt Bonds (35 Points) • 50% of Aggregate units funded by Tax-Exempt Bonds (45 Points) Both developments must be closed by April of the year following the allocation year. A one-time 4% bond closing extension to September of the year following the allocation year will be allowed with a $10,000 extension fee. Failure to close the tax-exempt bond development by this date will result in the loss of the 9% credits and penalty points for three years that are double the points received.
7.12.5	Rental Assistance Demonstration (RAD) program, or other PHA conversion to project-based rental assistance, and competing in the LHA Pool	0 or 10	Any development participating in the Rental Assistance Demonstration (RAD) program, or other PHA conversion to project-based rental assistance, competing in the Local Housing Authority pool. Applicants must show proof of a CHAP or HUD commitment.

7.13. Reservation Application- 4% Tax-Exempt Bonds

Developments financed with tax-exempt bonds are eligible to apply for tax credits on a rolling basis and do not need to compete for credits. These developments, because they are federally subsidized, only qualify for the 4% credit. Bond financing must be more than 50% of the development's aggregate basis plus land while the maximum allowable credits are calculated on 100% of the qualified basis of the low-income units. Virginia Housing must determine that the development satisfies the threshold requirements of the QAP. Only the minimum amount of credits will be allocated to the development to make it financially feasible.

The application is the same for 9% and 4% credits and can be found on our website, Virginia Housing.com. The 4% Tax Credit Application was created using Microsoft Office 2016. The Mandatory Items that must be submitted with the 4% Reservation application are the same as "Reservation Application Mandatory Items," described in Section 6.5., as well as a Physical Needs Assessment (if applicable) and a Phase I Environmental Assessment. Please note that there is a requirement to meet with TCA Staff prior to submission of reservation application. If available, please add an inducement resolution.

DEADLINE: For Virginia Housing bond-issued developments, tax credit applications should be submitted at least one month before Virginia Housing bond pricing. For non-Virginia Housing bond issuance, applications should be submitted at least 75 days prior to bond issuance.

#	Description
7.13.1	Complete the Locality Notification Information form (online submission) prior to application submission
7.13.2	Submit the Application for Reservation— The market study, Physical Needs Assessment (if applicable), Phase I Environmental Site Assessment, and $1,000 Application Fee are due with the Application
7.13.3	The appraisal fee (if applicable) is due when Virginia Housing notifies the Applicant of the appraisal fee (typically within 7-10 days of receiving Application
7.13.4	VH reviews the Application for threshold, financial and market feasibility
7.13.5	If the Application qualifies for an allocation, Virginia Housing will request payment of the Reservation Fee
7.13.6	After receipt of the Reservation Fee, Virginia Housing sends the Section 42(m) letter, Extended Use Agreement and Election to Fix Applicable Percentage.
7.13.7	If the applicant chooses to lock the rate, an original, signed Election to Fix Applicable Percentage must be received at VH by close of the 5th day of the month following the month bonds are issued.
7.13.8	An Existing Conditions Questionnaire must be submitted with the reservation application for all 9% and 4% deals.

NEW! Virginia Housing will be requiring the submission of a 50% test with all 4% deals to be submitted after bond closing and no later than 8609 application.

7.14. How to Submit Reservation Applications (9% and 4%)

Applicants must submit all application materials through Procorem only! Submit application material following the protocol below.

Naming Protocol	Description
[Dev Name] - Reservation App	Active Microsoft Excel workbook
[Dev Name] – Reservation App **NOTE: If all attachments are not in one pdf, Virginia Housing has the right to deny the application.**	PDF file which includes the following: PDF copy of the signed application, including self-score sheet and all application attachments (i.e. tab documents, excluding the market study, plans, specs and/or work write-up)
[Dev Name] - Market Study	PDF or other readable electronic format
[Dev Name] - Plans & Specs & Unit-by-Unit Write-up (if applicable) **or** [Dev Name] – Plans & Unit-by-Unit Write-up (if applicable) [Dev Name] - Specs	Electronic Plans and Specifications Electronic Unit-by-Unit Work Write-up (if applicable)
[Dev Name] - Physical Needs Assessment (if applicable)	PDF or other readable electronic format
[Dev Name] – Phase I Environmental Assessment	PDF or other readable electronic format

* [Dev Name] = type in the name of the development

To set up a Procorem work center, applicants must email the Tax Credit Allocation department with the email address and the name of the project(s) you want associated with that email address. Please see instructions for using Procorem at Virginia Housing.com for more information.

Application fees must be paid prior to the deadline. Submit fees per the process in Section 12.2.

If a mandatory item is not provided with the Reservation application or needs to be corrected, the Executive Director may allow applicant an opportunity to submit such attachments with a possible 10-point penalty. Virginia Housing reserves the right to request additional information for of clarification.

8. Allocation Information

In addition to scoring applications, Virginia Housing must also determine the amount of credits to award the development. In no case can Virginia Housing provide more credits than necessary to make the development financially feasible. This is a two-step analysis, with the development qualifying for the lesser of: (1) the maximum amount of credits allowed on the development given the amount of eligible basis and the percentage of qualified low-income units (i.e. the applicable fraction) and (2) the amount of credits necessary to generate enough equity to fill the gap between the development's total sources and uses. Applications must remain competitive throughout allocation and 8609. If scores drop to the point where they are no longer competitive, credits may be reduced.

A reservation of credits is made after an initial feasibility analysis by Virginia Housing and is conditioned the development's sponsor meeting certain requirements. Applicants who satisfy the requirements are given an allocation of credits. If a development is placed in service in the year of allocation, it qualifies for a **regular allocation** and Forms 8609 may be issued on or before December 31. If the development is not placed in service in the year of allocation, the developer must request a **carryover allocation**. A second feasibility analysis is completed by Virginia Housing to reflect any changes in the development's cost and/or financial structure shown in the Allocation app application, granting a Carryover Allocation.

After a building has been placed in service (i.e., the rehab is substantially complete as evidenced by AIA Substantial Completion form or for new construction, Certificates of Occupancy are issued), the Owner will submit the Application for IRS Form(s) 8609 to Virginia Housing. A third feasibility analysis performed at that time. The final credit amount is the lesser of the amount necessary to make the development feasible and the amount of the earlier carryover allocation.

8.1. Allocation Applications

Virginia Housing sends out customized Carryover allocation applications to developers that have accepted a reservation of credits. Carryover Allocation Applications are due back to Virginia Housing no later than the established deadline posted in the schedule. A late charge of $500 per day will be assessed for each calendar day past the due date that the Allocation Application is not returned to Virginia Housing.

At the issuance of the allocation, an allocation representative will be assigned to each development. Please contact your assigned allocation representative if you have any questions during the allocation process.

8.2. How to Submit Allocation Applications

Complete the Allocation Application by verifying and/or updating answers to all questions. Submit all application materials in electronic format only to the Virginia Housing Procorem site. The following protocol must be used to name files.

Naming Protocol	Description
Allocation – [Dev Name] – Application	Active Microsoft Excel workbook
Allocation – [Dev Name] - Application	PDF copy of the signed application
Allocation – [Dev Name] – Attorney's Opinion	Attorney's Opinion
Allocation – [Dev Name] – IRS EIN #	IRS EIN #
Allocation - [Dev Name] – Owner's Cert	Owner's Certification
Allocation – [Dev Name] – Investor LOI	Investor LOI
Allocation – [Dev Name] – [Document Name]	Other document(s) revised since the Reservation Application
Allocation - [Dev Name] – EUA (Recorded)	Recorded EUA
Allocation - [Dev Name] – ROFR (Recorded)	Non-Profit or Local Housing Authority (LHA) Right of First Refusal
Allocation - [Dev Name] – Site Control (Recorded)	Recorded Site Control Documentation (Deed, Land Lease, etc.)
Allocation – [Dev Name] – Physical Needs Assessment	Physical Needs Assessment, only applicable for 9% rehab.
Allocation – [Dev Name] – Phase I Environmental Site Assessment	Phase I Environmental Site Assessment, only applicable for 9% deals.

*[Dev [Dev Name] = type in the name of the development

8.3. Allocation Application Mandatory Items

The following items must be submitted with the Allocation application.

#	Mandatory Item
8.3.1	Excel copy of the Allocation Application
8.3.2	Electronic/PDF copy (via Procorem site) of signed Allocation Application and attachments
8.3.3	Attorney's Opinion
8.3.4	IRS Letter Confirming the Assignment of the EIN Number (Form SS-4) to the owner (i.e. LP, LLC, etc.)
8.3.5	Site Control Documentation in the form of (1) a copy of the recorded deed or land lease (or memorandum of land lease) or (2) a copy of the document and recording receipt (separate deadline established in Reservation documents)
8.3.6	Owner's Certification – must include an itemized list of expenditures. This does not have to be certified by a CPA, unless required by the attorney for the Attorney's Opinion letter. For purposes of calculating the 10% test, the

#	Mandatory Item
	reasonably expected basis in the development consists of land and depreciable property, regardless of whether those items are included in eligible basis.
8.3.7	Recorded Extended Use Agreement - if the recorded Extended Use Agreement is not returned from the locality by the application due date, submit a copy of the Extended Use Agreement and copy of the recording receipt (separate deadline established in Reservation documents)
8.3.8	Recorded Non-Profit or Local Housing Authority (LHA) Right of First Refusal (separate deadline established in Reservation documents)
8.3.9	Letter from Syndicator or Investor (LOI)
8.3.10	Other documents revised since the Reservation Application
8.3.11	Capital Needs Assessment, if rehab
8.3.12	Phase I Environmental Site Assessment

8.4. Meeting the 10% Test

If the owner has not incurred more than 10% of the reasonably expected basis by the Allocation Application due date, then it must submit documentation to Virginia Housing that more than 10% of the reasonably expected basis has been incurred within 12 months of the Carryover Allocation Agreement date.

Starting in 2019, 10% tests are due 30 days prior to the 12-month deadline for meeting the expenditure test.

9. Application for 8609 Information

Virginia Housing policy relating to both 9% allocations and 4% tax-exempt allocations requires that the owner notify Virginia Housing's Tax Credit Allocation Department in writing within 30 days after the date the units in the last building in the development are ready for occupancy. Place the building in service by a notice of substantial completion for rehab projects or certificates of occupancy (CO) for new construction. If new construction, at least one unit per BIN must have a CO or temporary CO. In the case of rehabs, there is also a per unit expenditure test that can be met for this purpose if substantial completion has not been achieved. The required expenditure amount is $6,000 plus an inflationary figure that puts the total at approximately $6,700 per unit. A cost certified per unit expenditure in lieu of substantial completion is required to support the expenditure amount.

If the 8609 Application, including requested supporting documentation, is submitted to Virginia Housing late, the owner will be subject to a fine of $100 per calendar day, up to $7,500; thereafter, the owner will be fined an additional 4% of the outstanding cumulative balance on each one-month anniversary. Form(s) 8609 will not be issued until the fee is paid.

9.1. Application for 8609

Following notification of readiness for occupancy to Virginia Housing's Tax Credit Allocation Department, the owner will receive a customized 8609 application for their development. Virginia Housing will also schedule the final physical inspection of the development, which will include entry into several representative units. The primary purpose of this inspection is to determine that the building(s) and units were produced in accordance with representations made in the Reservation Application and in accordance with Virginia Housing's Minimum Design & Construction Requirements.

Virginia Housing prefers that loan closings for permanent financing occur before requesting Form(s) 8609. However, if closing has not occurred, you may still submit an 8609 Application. Submit a copy of the permanent funding commitment(s), along with other supporting documentation requested on the 8609 Submission Checklist.

An Auditor's Report and Final Cost Certification are required prior to the issuance of the final housing credit allocation and IRS Form(s) 8609. The Independent Auditor's Report must be completed in accordance with generally accepted auditing standards, which require that the auditor obtain reasonable assurance about whether the Final Cost Certification is free of material misstatement. The Final Cost Certification is an itemization of final development costs and concludes which portion of the costs is included in eligible basis. For consistency, the itemization presented in the Final Cost Certification should match the itemization in the 8609 Application. Virginia Housing would also like to see certified uses attested to by a certified auditor.

9.2. Deadline for 8609 Applications

For both 9% and 4% deals, a completed 8609 Application must be submitted to Virginia Housing within 180 days of the date on which a development's last building becomes ready for occupancy, as evidenced by the Certificate of Occupancy (for new construction) or Architect's Certificate of Substantial Completion (for rehabs).

Special Rule for 9% Credit Developments: According to Virginia Housing's Contract to Enforce Representations, 8609 Applications for 9% credit developments are due no later than April 30th of the second year following the year of allocation. Extensions may be granted for up to 12 months beyond April 30th with prior approval by Virginia Housing.

9.3. How to Submit the 8609 Application

An Excel copy of the Application, as well as an electronic/PDF copy of the signed Application and all attachments must be submitted to the Virginia Housing Procorem site. **Do not e-mail or submit hard copies.**

9.4. Application for 8609 Mandatory Documents

The following items must be submitted with the application for 8609. Submit the following using the Virginia Housing Procorem site:

#	Mandatory Item
9.4.1	Completed 8609 Application (active Excel workbook)
9.4.2	Electronic/PDF copy of the signed Application
9.4.3	Virginia Housing-requested supporting documents (see Application Submission Checklist)
9.4.4	Permanent financing documentation (or other docs. if Closing has not occurred)
9.4.5	Construction Contract and GC Cost Certification
9.4.6	Grant Agreement(s), if applicable
9.4.7	Final Partnership Agreement and Development Agreement (if applicable)
9.4.8	Independent Auditor's Report
9.4.9	Final Cost Certification
9.4.10	Certification of Sources and Uses
9.4.11	EIN verification for 4%
9.4.12	Green certification, if applicable.

9.5. Application for 8609 Deadlines

The following deadlines must be met for the submission of 8609 application information.

Deadline	Description
Within 30 days of construction completion of the units in the last building	Submit notification to VH's Tax Credit Allocation Department no later than 30 days after the units in the last building are ready for occupancy, as evidenced by a Certificate of Occupancy or Architect's Certificate of Substantial Completion (if rehab).
No more than 180 days after construction completion of the units in the last building	Submit the 8609 Application, including supporting documentation (see list above and 8609 checklist).
No later than April 30th (of the second year following the year of allocation)	8609 Applications for developments financed with 9% credits are due. Extensions may be granted for up to 12 months beyond April 30th with prior approval by Virginia Housing.

9.6. Corrections to 8609(s)

Virginia Housing often receives requests to amend previously issued 8609s (e.g. building addresses or placed-in-service dates that are listed incorrectly on the Application by the owner). Errors may cause the allocation of tax credits to be invalid and subsequently, cause recapture of the tax credits by the IRS. Due to the administrative burden placed on everyone involved, Virginia Housing will charge $100 for each Form 8609 to be corrected and reissued.

10. Recapitalization

No application for new credits will be accepted for any building or development that is still subject to the compliance period for previously allocated low-income housing tax credits.

Any development having completed the initial compliance period and receiving additional credits must continue to comply with the existing Extended Use Agreement as well as any new Extended Use Agreement restrictions.

An applicant may submit an application for credits for a development for which the extended use period was terminated as a result of foreclosure, provided the applicant has no relationship with the owner or owners of such development during its initial compliance period.

Including in the case of foreclosure, acquisition credits are not available until the initial 15-year compliance period has ended.

11. Qualified Contract Information

Starting January 1, 2019, all applications that receive an allocation of either 9% or 4% credits waive the right to pursue a Qualified Contract. Also, any principal in a development that pursues a Qualified Contract after January 1, 2019 will not be eligible to apply for an allocation of credits in any subsequent rounds.

Section 42(h)(6)(E)(i)(II) of the IRC created a provision that housing credit agencies respond to requests for presentation of a Qualified Contract ("Request for Qualified Contract") for tax credit developments with expiring compliance periods. The Request for Qualified Contract is a request that the housing credit agency find a buyer (who will continue to operate the property as a qualified low-income property) to purchase the property for a qualified contract price, calculated pursuant to IRS Section 42(h)(6)(F). If the housing credit agency is unable to present a qualified contract within one year, the extended use period is terminated. However, the development will remain subject to the requirements set forth in Section 42(h)(6)(E)(ii); that is, for a three-year period commencing on the termination of the compliance period, the owner may not (i) evict or terminate a tenancy (other than for good cause) of an existing tenant of any low-income unit, or (ii) increase the gross rent with respect to any low-income unit except as permitted under Section 42 of the IRC, as well as the requirements of the Extended Use Agreement. A qualified purchaser can be a non-profit or a for-profit entity that agrees to maintain the affordable housing units and fulfill all requirements of the Extended Use Agreement.

Many owners have chosen to waive the right to request a Qualified Contract and have committed to thirty years or more of operation as low-income rental housing. Owners should review the QAP, Tax Credit Application, Carryover Agreement and Extended Use Agreement to determine whether a waiver is in place for the development. See Appendix for more information on Virginia Housing's Qualified Contract process.

12. Program Administration

Please refer to this section for questions related to the administration of the LIHTC program.

12.1. Summary of Program Fees

The following fees will be assessed:

Amount	Description	Program
$1,000	**Application Fee** - Applications will not be processed until the application fee is paid.	9%, 4%
TBD	**Appraisal Fee** – The appraisal fee (if ordered by Virginia Housing) based on the complexity of the assignment. Virginia Housing will not order the appraisal until the fee is received.	9, 4%
7% of annual credit amount	**Reservation Fee**- Assessed only to those applicants accepting a 9% credit reservation; the amount is communicated in a letter sent with the Reservation Agreement; due as instructed in Reservation correspondence from Virginia Housing.	9%
7% of annual credit amount	**Reservation Fee-** Assessed only to tax-exempt bond applicants who qualify for an allocation of 4% tax credits; due after the submission of the Application, upon written request by Virginia Housing. This fee will be calculated based on the lesser of the credit amount from Virginia Housing's feasibility review or the credit amount requested by the Applicant. If at 8609 Application the review causes a reduction in the feasible credit amount, there will be no refund of the original fee, as it is considered a minimum application fee; the Section 42(m) letter will not be issued until the fee is paid	4%
$500 per calendar day	**Late Submission of Reservation Agreement**- fee is assessed when any of the reservation documents, including Reservation Agreement, are not submitted to Virginia Housing by the stated deadlines; communicated to Applicants via Reservation Agreement cover letter; significant delay may result in loss of the reservation. After 5 p.m. on any date is considered the following calendar day.	9%
$500 per calendar day	**Late submission of Allocation Application** - fee is assessed per calendar day for each day after the deadline. After 5 p.m. on any date is considered the following calendar day; applications will not be processed until the fee is paid	9%

Amount	Description	Program
$100 per calendar day	**Late submission of Placed in Service documentation-** fee is assessed per calendar day for each day after the deadline. Placed in service documentation must be submitted within 30 days of being issued.	9%, 4%
$100 per calendar day	**Late Submission of 8609 Application** - it is Virginia Housing's policy completed 8609 Applications be submitted within 6 months of the development's Construction Completion Date, as evidenced by a Certificate of Occupancy or Architect's Certificate of Substantial Completion (if rehab). The fee is $100 per calendar day, up to $7,500; thereafter 4% of the outstanding balance each one-month anniversary). Form 8609 will not be issued until the fee is paid.	9%,4%
$100 per form	**Correction of Form(s) 8609** - The fee is assessed when an owner requests Virginia Housing to issue an amended 8609 due to the original being issued with incorrect data supplied by the owner. The amended 8609 will not be issued until the fee is paid.	9%, 4%
$50 per form	**Replacement of Documentation Previously Provided,** e.g. original Extended Use Regulatory Agreement	9%, 4%
$35 per unit per year	**Compliance Monitoring Fee** - after all buildings are placed in service. The fee is reduced to $20 per unit during the extended use period (years 16-30). Submit to Virginia Housing's Compliance department.	9%, 4%
$25 per unit per year	**Compliance Monitoring Fee** – RD Developments - after all buildings are placed in service. The fee is reduced to $10 per unit during the extended use period (years 16-30). Submit to Virginia Housing's Compliance department.	9%, 4%
$20,000	**Qualified Contract Preliminary Application Fee**	9%, 4%
$20,000	**Qualified Contract Application Fee**	9%, 4%
$1,500	**Extension Fee-** per request	9%, 4%

For-profit sponsors pay reservation fees at the time signed reservation agreements are due at Virginia Housing. Non-Profit sponsors competing or eligible to compete in the Non-Profit Pool developments competing or eligible to compete in the Local Housing Authority Pool pay reservation fees at the time of the first syndication payment, but no later than the Allocation Application Deadline.

Waiver of application fees and reservation fees are not granted under any circumstances. The Executive Director has the discretion to waive all other fees. Waivers may be granted as circumstances warrant and will be evaluated on a case-by-case basis.

12.2. How to Submit Payments

Make payments by check, Automated Clearing House (ACH) payment, or wire transfer. Checks are considered received at the time they are delivered to the LIHTC Allocation Department. Mail checks to:

Virginia Housing
Attn: Tax Credit Allocation
601 S. Belvidere Street
Richmond VA 23220

Contact the LIHTC department (taxcreditapps@virginiahousing.com) for instructions. Prior to making your payment, you MUST send the an email that describes the following:

1. The name of the development
2. The type of fee
3. The date that you will be making the transaction
4. How much you will be sending (to the cent)

IMMEDIATELY after you have completed the transaction you MUST forward a remittance advice slip showing that the transaction was completed (i.e. confirmation from your bank that your transaction has been completed).

Transactions are considered received when Virginia Housing LIHTC Allocation receives the funds in designated account.

12.3. Updating Program Information

Periodically, it is necessary to update information relating to the tax credit program due to the availability of new information or to clarify program requirements in response to new questions. Updates will be sent via e-mail and will be posted on the Virginia Housing LIHTC Programs Applicants are responsible for making sure they receive all necessary information for submitting applications.

12.4. Change of General Partner or Managing Member

Change of General Partner or Managing Member (direct or indirect) is prohibited prior to the development being placed-in-service (PIS) and is subject to approval by Virginia Housing.

Per the Extended Use Agreement, the Owner shall notify Virginia Housing, in advance, of any sale, assignment, transfer or exchange of all or any part of the development or of any ownership interest in the Owner (other than investor member interests).

In addition, the Extended Use Agreement requires that an applicant that received LIHTCs as a result of competing in the Non-profit Pool, remain a Qualified Non-Profit Organization (as defined in subsection (h)(5)(C) of § 42); materially participate in the development and operation of the development throughout the Compliance Period; and own 100% of the managing member interests in the Owner throughout the Extended Use Period.

12.5. Related Entities Limit

No more than 15% of the per capita credit amount may be reserved to any party or related parties, either directly or indirectly, in any credit year. See the QAP for information on related parties and the credit cap. This limitation does not apply to credits awarded to developments funded with tax-exempt bonds but does apply to developments receiving credits in the Accessible Supportive Housing 9% pool. The limit is applied to the year credits are reserved.

12.6. Applications are Open to the Public

Applications are subject to review under the Virginia Freedom of Information Act. As such, interested individuals may request the opportunity to inspect and copy them.

Applications for 9% credits are available for viewing on Virginia Housing's website. Virginia Housing will post Applications and all attachments (excluding plans, specifications, and appraisals). Scanned files are listed alphabetically by development name.

12.7. Authorization of the Executive Director

The Executive Director is authorized to waive or modify any provision herein, where deemed appropriate by him, for good cause to promote the goals and interests of the Commonwealth in the federal Low-income Housing Tax Credit program, to the extent not inconsistent with the IRC.

Appendices

A. Market Study Guidelines and Approved Analyst List

Market Study Guidelines

The Internal Revenue Code and the Qualified Allocation Plan ("QAP") of Virginia require the submission of a market study in connection with an application for Low Income Housing Tax Credits (LIHTC).

Virginia Housing, in accordance with Section 42(m)(1)(A)(iii) of the Internal Revenue Code, requires that the entity preparing the market study be a disinterested party, approved by Virginia Housing ("the credit agency"). Accordingly, the analyst cannot have any interest in the development or have a relationship with the owner of the development.

All applicants applying for Low-Income Housing Tax Credits (LIHTC) are required to submit a market study at the time of application. Failure to submit the market study by the stated deadline may disqualify the application.

Only Virginia Housing approved market analysts will be allowed to complete market studies for developments seeking a LIHTC reservation. A complete listing of approved market analysts can be found on the Virginia Housing website.

A developer submitting an application for a development that will be funded with both 9% and 4% tax credits, must submit a separate market study for the 9% project and the 4% project.

Virginia Housing has no contractual relationship with the preparer of the market study. Market studies are procured directly by the LIHTC applicant and accordingly, the applicant is the client of the market analyst. Therefore, the market study should be addressed directly to the client and any representations made by the market analyst should not directly or indirectly communicate that the market analyst is representing Virginia Housing or in any way acting for, at the request of, or on behalf of Virginia Housing. The analyst, however, must identify Virginia Housing as an authorized user of the market study, noting that Virginia Housing may rely on the representations made therein.

The market study **must be submitted to Virginia Housing by the LIHTC applicant and included within the pdf Application Tab**.

The market study should be in electronic, PDF format. Virginia Housing should be able to select, copy and cut text**.** In reviewing any LIHTC application and the corresponding market study, Virginia Housing at its sole discretion may request supplementary market data from the analyst or commission an additional

market study. The market analyst conducting this additional work, will be commissioned and compensated directly by Virginia Housing, and in such transaction, Virginia Housing will be the client of the market study preparer. The applicant may be required to bear the cost of additional market studies/inquiries.

Any market study submitted to Virginia Housing in connection with a LIHTC application will remain Virginia Housing's possession and may continue to be relied upon by Virginia Housing in determining the market feasibility of the proposed development, regardless of any circumstances that might exist between the LIHTC applicant and the market study analyst or firm.

On occasion, there are inconsistencies between certain representations in the LIHTC application and representations in the market study pertaining to various development attributes, such as architectural features, unit amenities, site amenities, etc. In these instances, Virginia Housing will rely only upon representations made in the LIHTC application, including supporting application documentation, as the basis for any LIHTC allocation. If the degree of inconsistency implies a disconnection between the applicant and the market analyst, then the market study may not be approved and the LIHTC application may be disqualified.

No LIHTC reservation will be made until Virginia Housing has determined that a sufficient analysis of demand for the proposed development has been completed. Each report must meet all market study requirements, including, the inclusion of specific data, required calculation methods and report format. Furthermore, reports must be written and contain sufficient information, analysis and supporting documentation to provide Virginia Housing with an understanding of the market data presented, the analysis of the data, and the conclusion(s) of such data and its relationship to the subject property. The market study should lead the reader to the same or similar conclusion(s) reached by the analyst. If these requirements are not met, then the study and the entity which prepared it may not be approved.

For Virginia Housing purposes, **the date of the site inspection is the Effective Date of the report**. The Effective Date must be obviously stated on the cover page or in the Executive Summary section of the report. For a market study with an Effective Date that is 6 to 12 months old at the time of submission, if there are no material changes to the development and/or market, the analyst can provide a letter stating "No material changes since last report dated..." If there are material changes, the market study must be updated to include detailed discussion about those changes. No market study greater than 12 months old will be accepted, meaning a site inspection by the market analyst **must** occur within 12 months of Virginia Housing's application deadline.

Market studies for LIHTC developments will model the National Council of Housing Market Analysts' (NCHMA's) Model Content Standards (Version 3.0) , as well as its Market Study Terminology , Market Study Index and FAQs (for Model Content Standard).

Section A (Virginia Housing & NCHMA Model Content Standards)**: Executive Summary**

Section B (Virginia Housing & NCHMA Model Content Standards)**: Introduction and Scope of Work**

Section C (Virginia Housing & NCHMA Model Content Standards)**: Project Description**

In addition to NCHMA requirements under this section, the analyst must discuss:

1. Construction Type - New Construction, Rehabilitation, Adaptive Reuse
2. Occupancy Type - Family, Elderly
3. Indicate if the proposal is a scattered site development
4. Income Restrictions: Use the applicable income restrictions of the proposed development. Analysts must take the income and occupancy restrictions indicated in the LIHTC application into account when estimating demand.
5. Site amenities of one phase of a development cannot be included as amenities in subsequent phases of a development.

Section D (Virginia Housing & NCHMA Model Content Standards)**: Location**

Section E (Virginia Housing & NCHMA Model Content Standards)**: Market Area**

In addition to NCHMA requirements under this section, the analyst must consider:

1. All sites in a scattered site development must be within the boundaries of the primary market area.
2. Primary market areas are prohibited from being defined using concentric rings.
3. Analysts are encouraged to be conservative in defining the primary market area.
4. Include secondary or tertiary markets.
5. Primary market areas deemed to be inappropriate by Virginia Housing may cause the market study/analyst to be rejected and thereby cause the application to be disqualified.

Section F (Virginia Housing & NCHMA Model Content Standards)**: Employment & Economy**

Section G (Virginia Housing & NCHMA Model Content Standards)**:**
Demographic Characteristics

In addition to NCHMA requirements under this section, the analyst must discuss:

1. Elderly is defined as 55 and older.

2. If elderly population serving 55 and older, account for that population.
3. The number of owner and renter households (if appropriate, breakout by elderly/non-elderly)
4. Households by income (if elderly development, indicate income distribution of elderly households only)
5. Renter households by number of persons in the household
6. At a minimum, use the current year's estimate and a five-year projection (i.e. if your study is completed in 2020, you will use 2020 estimates and projections for 2025).

Section H (Virginia Housing & NCHMA Model Content Standards)**:**
Competitive Environment

In addition to NCHMA requirements under this section, the analyst must consider the following:

1. All comparable LIHTC developments located within the primary market area must be included in the analysis; LIHTC communities targeting a different tenant base (elderly, family, and/or PBRA) may be excluded from the analysis but identified.

2. Provide a detailed analysis of the impact of the proposed project on existing and comparable LIHTC properties in the primary market area.

3. Proposed rural developments for which a sufficient number of comparable properties does not exist, the analyst must select at least three (3) comparable developments in adjacent localities with similar characteristics to be included in its analysis. Analysts should explain any socio-economic or housing market differences between the comparable properties' and the subject project's markets.

4. Family and elderly developments should not be considered as competitive with each other. However, in cases where there are no comparable senior projects in the primary market area or region, analysts may consider using family projects with bedroom types similar to those proposed at the subject project as comparable properties.

total housing costs (rent plus utilities). The demand analysis must clearly indicate the minimum and maximum income range for each targeted group.

For applicants proposing developments with project-based rental assistance (Section 8, Public Housing, USDA Rental Assistance) analysts should use the lesser of maximum allowable LIHTC rents or proposed rents based on income targeting indicated in the application in determining affordability. Analysts should provide demand estimates and capture rates both with and without additional project-based subsidies.

For applicants proposing developments with market rate units, the analyst must make a reasonable determination of a maximum income level beyond which a household would not likely be a participant in the rental housing market. Assumptions used in making this determination must be clearly stated in the report.

For applicants submitting an application for a development that will be funded with both 9% and 4% tax credits, the capture and penetration rate analyses should be done for the total number of units expected to come online between both the 4% and 9% projects.

4. Analysts are required to use net demand in calculating capture rates and the absorption period. Net demand should be determined by subtracting the supply of vacant comparable units in the PMA, completed or pipeline, from total demand. Demand, Supply, Net Demand and Total Absorption Period should be indicated as follows:

Income Restrictions	Up to 40% (min. income to max. income)	Up to 50% (min. income to max. income)	Up to 60% (min. income to max. income)	Market Rate (min. income to max. income)	Project Total (min. income to max. income)
New Rental Households					
(+)					
Existing Households - Overburdened					
(+)					
Existing Households - Substandard Housing					
(+)					
Elderly Households - Likely to Convert to Rental Housing					
(+)					
Existing Qualifying Tenants - to Remain After Renovation					
TOTAL DEMAND					
(-)					
Supply (includes directly comparable vacant Units completed or in pipeline in PMA)					
NET DEMAND					
PROPOSED UNITS					
CAPTURE RATE					
ABSORPTION PERIOD					

Project Wide Capture Rate - LIHTC Units	
Project Wide Capture Rate - Market Units	
Project Wide Capture Rate - All Units	
Project Wide Absorption Period (Months)	

New Rental Households: determine new units in the primary market area based on projected rental household growth. The projected household base **must be** limited to the target group, age and income appropriate. Demand for each target group must be shown separately.

Existing Households: The sum of demand from rental household growth and demand from all components of existing households will constitute **Total Demand**.

- Over-burdened' is defined by Virginia Housing as households paying more than 35% of gross income (40% if elderly) for gross rent. Analysts are encouraged to be conservative.

- Households in substandard housing (i.e. overcrowded and/or lack of plumbing): Must be age and income group appropriate. Analysts must use their knowledge of the market area and the proposed development to determine if demand from this source is realistic. Analysts are encouraged to be conservative.

- Elderly homeowners likely to convert to rental housing: This component may not comprise more than 20% of total demand. The analyst must provide a narrative describing how these numbers were derived. Analysts are encouraged to be conservative.

- Existing qualifying tenants likely to remain at the subject property after renovation: This component of demand applies only to existing developments undergoing rehabilitation.

In addition to the above, the analyst is free to state other measures of demand in the body of the report. These statements must be fully explained as to where such demand is being derived, e.g. pent-up demand, tertiary demand, or demand from existing tenants in other rental properties.

Section J (Virginia Housing & NCHMA Model Content Standards)**: Local Perspective of Rental Housing Market and Housing Alternatives**

Section K (Virginia Housing & NCHMA Model Content Standards)**: Analysis/ Conclusions**

Section L (Virginia Housing & NCHMA Model Content Standards)**: Other Requirements**

NOTE: #5 in this Section is not required by Virginia Housing.

In addition to NCHMA requirements under this section, the analyst must include and affirm (by signature) the following:

1. I have made a physical inspection of the site and market area.
2. The appropriate information has been used in the comprehensive evaluation of the need and demand for the proposed rental units.
3. To the best of my knowledge the market can support the demand shown in this study. I understand that any misrepresentation in this statement may result in the denial of participation in the Low Income Housing Tax Credit Program in Virginia as administered by Virginia Housing.
4. Neither I nor anyone at my firm has any interest in the proposed development or a relationship with the ownership entity.
5. Neither I nor anyone at my firm nor anyone acting on behalf of my firm in connection with the preparation of this report has communicated to others that my firm is representing Virginia Housing or in any way acting for, at the request of, or on behalf of Virginia Housing.
6. Compensation for my services is not contingent upon this development receiving a LIHTC reservation or allocation.
7. Evidence of my NCHMA membership is included.

_____ _____

Market Analyst Date

Virginia Housing Approved Market Analysts Listing (LIHTC) Revised 7.21.2020

	Market Study Firm	Location	Principal Name	LIHTC Experience Includes...	Geographic Preference	Contact Info
1	Allen & Associates	Charlotte, NC	Jeff Carroll	Family, Elderly	All Areas	3116 Glen Summit Drive Charlotte, NC 28270 Ph: (704) 905-2276 jcarroll@allenadvisors.com
2	Area Probe	Washington, DC	Curvin Leatham	Family, Special Needs, Elderly	All Areas	1133 15th Steet, NW, 12th Floor Washington DC 20005 (202)281-5311 cleatham@areaprobe.com
3	Baker, Tilly, Virchow, Krause, LLC	Madison, WI	David Haviland	Family, Elderly	All Areas	Baker, Tilly, Virchow, Krause, LLC 10 Terrace Court P.O. Box 7398 Madison, WI 53707-7398 (608)240-2358 david.haviland@bakertilly.com
4	Bowen National Research, LLC	Pickerington, OH	Patrick Bowen	Family, Elderly, Special Needs	All Areas	Desiree Johnson Bowen National Research, LLC Ph: 614-833-9300 desireej@bowennational.co
5	CDS Realty Company	Richmond, VA	C. Douglas Schepker, MAI, CRE	Family	Central VA	CDS Realty Company 8711 Ruggles Road Richmond, VA 23229 Ph: (804) 288-1215 cdschepker@comcast.net
6	Colliers International (formerly MG Miller & Associates)	Richmond, VA	Michael G. Miller, MAI, SRA, AI-GRS, CCIM, FRICS	Family, Elderly, Special Needs	All Areas	5316 Patterson Avenue Richmond, VA 23226 Ph: (804) 288-9583 michael.g.miller@colliers.com www.colliers.com
7	Danter Company	Columbus, OH	Terry Hall	Family, Elderly, Special Needs	All Areas	Marketing Director Danter Company, LLC 2760 Airport Drive, Suite 135 Columbus, OH 43219 Ph: (614) 437-9670 thall@danter.com www.danter.com
8	EAJoseph Appraisal & Consultation	Richmond, VA	Eugene A. Joseph, Jr., MAI, SRA, AI-GRS	Family, Elderly, Special Needs	All Areas	Eugene A. Joseph, Jr., MAI, SRA, AI-GRS EAJoseph Appraisal & Consultation PO Box 8225 Richmond, Virginia 23226 Ph: (804) 353-1757 Fax: (888) 977-3716 Mobile: (804) 467-2517 gene@eajoseph.com
9	Fielder Group Market Research, LLC	Lexington, KY	Elizabeth K. Rouse	Family, Elderly, Special Needs	All Areas	Fielder Group Market Research, LLC P. O. Box 22698 Lexington, Kentucky 40522-2698 Ph: (859) 276-0000 erfielder@fieldergroup.com
10	Gibson Consulting, LLC	Douglasville, GA	Jim Howell, GM and Senior Analyst	Family, Elderly, Special Needs	All Areas	Gibson Consulting, LLC 5077 Chapel Lake Circle Douglasville, GA 30135-2687 Ph: (318) 524-0177 ford@fgibsonconsulting.com
11	Gill Group	Dexter, MO	Samuel L. Gill, MAI	Family, Elderly	All Areas	P.O. Box 784 512 One Mile Rd Dexter, MO 63841 Ph: (800) 428- 3320 cash.gill@gillgroup.com www.gillgroup.com
12	John Wall & Associates	Seneca, SC & Charlotte, NC	Bob Rogers & Joe Burris	Family, Elderly	All Areas	P.O. Box 1835 Seneca, SC 29679 Ph: 864-261-3147 ext.104 bob@johnwallandassociates.com joe@johnwallandassociates.com
13	Koontz & Salinger	Raleigh, NC	Jerry M. Koontz	Family, Elderly	All Areas	PO Box 37523 Raleigh, NC 27627 Ph: (919) 362-9085 vonkoontz@aol.com

Virginia Housing

Virginia Housing Approved Market Analysts Listing (LIHTC) Revised 7.21.2020

14	LDS Consulting Group	Newton, MA	Lynne D. Sweet	Family, Elderly, Special Needs	All Areas	LDS Consulting Group, LLC 233 Needham Street Newton, MA 02464 Ph: (617) 454-1144 ldsweet@ldsconsultinggroup.com www.ldsconsultinggroup.com
15	Lea & Company	Corona Del Mar, CA Omaha, NE Merriam, KS	Byron N. Lea, MAI	family, elderly, special needs	All Areas	byronlea@leacompany.com Ph: (818) 914-1892
16	Market Analyst Professionals	Minneapolis, MN	Chris Vance	family, elderly, special needs	All Areas	Market Analyst Professionals 5400 Washburn Ave S Minneapolis, MN 55410 Ph: (248) 515-0496 cavance@mindspring.com
17	National Land Advisory Group	Columbus, OH	Richard A. Barnett	Family, Elderly	All Areas	National Land Advisory Group 2404 E. Main St. Columbus OH 43209 Ph: (614) 545-3900 rbarnett@landadvisory.biz
18	Novogradac & Co LLP	Bethesda, MD	H. Blair Kincer, MAI, CRE	Family, Elderly	All Areas	Novogradac & Company LLP 4520 East West Highway, Suite 615 Bethesda, MD 20814 Ph: (240) 235-1705 blair.kincer@novoco.com www.novogradac.com
19	Real Estate Strategies, Inc.	Paoli, PA	Elizabeth M. Beckett, CRE	Family, Elderly, Special Needs	All Areas	Elizabeth M. Beckett, CRE Senior Vice President Real Estate Strategies, Inc./RES Advisors 63 Chestnut Road, Suite #6 Paoli, PA 19301 Ph: (610) 240-0820 Ebeckett@resadvisors.com www.resadvisors.com
20	Real Property Research Group	D.C./Baltimore/ATL	Robert M. Lefenfeld	Family, Elderly	All Areas	Real Property Research Group, Inc. 10400 Little Patuxent Parkway Suite 450 Columbia, MD 21044 Ph: (410) 772-1004 ext 6101 blefenfeld@rprg.net
21	S. Patz & Associates, Inc.	Potomac Falls, VA	Stu Patz	Family, Elderly, Special Needs	All Areas	S. Patz & Associates, Inc. 46175 Westlake Drive #400 Potomac Falls, VA 20165 Ph: (703) 421-8101 spatzec@comcast.net
22	Shaw Research & Consulting	Bad Axe, MI	Steven R. Shaw	Family, Elderly	All Areas	Shaw Research & Consulting P.O. Box 38 Bad Axe, MI 48413 Ph: (989) 415-3554 steveshaw@shaw-research.com
23	Specialty Valuation Group	Dublin, OH	Brian Gault	Family, Elderly	All Areas	Specialty Valuation Group 425 Metro Place North, 620 Dublin, OH 43017 Ph: (614)678-5490 ext. 108 Bgault@specialtyvaluation.com www.specialtyvaluation.com
24	T. Ronald Brown Research & Analysis	Cary, NC	T. Ronald Brown	Family, Elderly	All Areas	T. Ronald Brown P.O. Box 1294 Cary, NC 27512 Ph: (919) 233-0670 trb@tronaldbrown.com
25	Tony Kamana Realty, LLC	Toms River, NJ	Tony Kamana	Family, Elderly, Special Needs	All Areas	Tony Kamana 200 Main St., Suite 100 Toms River, NJ 08753 Ph: (732)286-9250 www.tonykomand.com
26	ValueTech Realty Services, Inc.	Lutz, FL	Kay Kauchick, MAI	Family, Elderly, Special Needs	All Areas	ValueTech Realty Services, Inc. 240 Crystal Grove Blvd. Lutz, Florida 33548 Ph: (813) 948-0545 www.gotovalue.com

Virginia Housing Approved Market Analysts Listing (LIHTC) Revised 7.21.2020

27	Vogt Strategic Insights (VSI) & Vogt Strategic Insights Appraisal Group, MAI	Columbus, OH	Rob Vogt	Family, Elderly	All Areas	Vogt Santer Insights 1310 Dublin Road Columbus, OH 43215 (614) 224-4300 RobV@VSInsights.com www.vsinsights.com
28	Waverly Research Group, Inc.	Las Cruces, NM	Donald F. Robinson	Family, Elderly, Special Needs	All Areas	The Waverly Research Group, Inc. 5015 Silverton Court Las Cruces, New Mexico 88011 Ph: (575) 522-3400 dfrobinson@waverlygroup.net
29	CBRE	Kansas City, MO	Matt Hummel	Family, Elderly, Special Needs	All Areas	CBRE 4520 Main Street, Suite 600 Kansas City, MO 64111 Ph: (816)304-2519 matt.Hummel@CBRE.com

Market Study Analyst
Application For Approval

To be listed on Virginia Housing's website as a market study analyst, you must submit this form by email to Sheila.Stone@virginiahousing.com. For questions please call 804-343-5822.

Date:

Name of Market Study Company: _____

Contact Information:

Address _____

_____

_____

Phone Number _____

Email _____

List all states in which you have submitted tax credit market studies:

_____

_____

_____

_____

I have read and understand the market study guidelines. The market studies, submitted for purposes of LIHTC in Virginia, shall at a minimum conform to all the requirements of the current Virginia Housing Market Study Guidelines (posted at virginiahousing.com/LIHTC Program). I/my firm has a minimum of five years of experience in market research on affordable, multifamily, rental housing. I/my firm has not been banned from submitting a market study in any state or federal department or agency. My obligations as an analyst/firm will not be assigned or transferred to any other person, firm or corporation without the prior written consent of Virginia Housing. All the information I have submitted is true and may be placed on the Internet at **www.virginiahousing.com**. I understand that I may be removed from the approved market analyst list at anytime for any reason by Virginia Housing.
Principal

_____
Signature

To be completed by Virginia Housing only.

Approved _____
Rejected _____

Criteria for Approved Market Analysts' Listing

The Analyst's listing is now closed and will be reconsidered in 2021 or at the instruction of the Director of LIHTC Programs.

Provide the following acknowledgements as included in the **Market Study Analyst Application for Approval**:

- That market studies, submitted for purposes of LIHTC in Virginia, shall at a minimum conform to all the requirements of the current *Virginia Housing Market Study Guidelines* (posted at virginiahousing.com/LIHTC Program).
- That the analyst and/or firm has a minimum of five (5) years of experience in market research on affordable, multifamily, rental housing.
- That the analyst and/or firm is not presently debarred, suspended, proposed for debarment or suspension, declared ineligible or excluded from participation by any state or federal department or agency.
- That the analyst's/firm's obligations will not be assigned or transferred to any other person, firm or corporation without the prior written consent of Virginia Housing.

In addition to the above, please submit the following via e-mail to Sheila.Stone@virginiahousing.com:

- Provide evidence that you are a member of the National Council of Housing Market Analysts (NCHMA). If you are currently not a member, please provide an explanation as to why you are not.
- A listing of up to 50 LIHTC and/or affordable, multifamily, rental developments for which you have completed market studies (preferably in Virginia), including development name, development address, number of units, construction type and development type (family/elderly)
- If the analyst/firm has not provided Virginia Housing with a market study for a LIHTC development in the last twenty-four (24) months, provide 3 reference letters from customers for whom you've completed market studies for LIHTC and/or affordable, multifamily, rental developments; preferably from state or local housing agencies and/or financial institutions. Letters should reference specific properties/property locations.
- If the analyst/firm is interested in performing market studies for LIHTC developments serving elderly and/or special needs tenants, provide a listing of all developments serving these specific populations for which you have completed market studies. This listing should include the property name, property address, number of units and whether the development was assisted with federal, state, or local funding.
- Please note if you have a preference for a particular area/region of Virginia (i.e. Northern Virginia, Hampton Roads, Central Virginia, Southwest Virginia, etc.). If there is no preference, please note "All areas of Virginia" in your cover letter/summary.

For questions concerning this criteria or Virginia Housing Market Study Guidelines, in general, contact Sheila Stone at (804) 343-5822 or via e-mail to: Sheila.Stone@virginiahousing.com.

B. 2021 Cost Limits

2021 Square Foot Cost Limits		
Northern VA and Supportive Housing		
Rehab	$	312
New Construction	$	390
Northwest/North Central		
Rehab	$	180
New Construction	$	238
Richmond MSA		
Rehab	$	197
New Construction	$	275
Tidewater		
Rehab	$	176
New Construction	$	262
Balance of State		
Rehab	$	151
New Construction	$	197

To calculate: (Total Development Cost - Land and Building Acquisition Costs)/ Total Floor Area Square Footage

C. Revitalization Area Information

Revitalization Area

General Instructions

Revitalization areas are defined in Virginia Code §36-55.30:2.A.

Designation

To qualify for revitalization area points, select one of the following (and provide adequate documentation):

1. The development is located in a Qualified Census Tract, as defined by HUD. (10 points)

2. The development is located in a census tract wherein 70% or more of the families have incomes which are ≤ 80% statewide median income. NOTE: These census tracts are included in the definition of target area for single-family purposes, but do not include ACEDS. (10 points)

3. The development is located in an already established redevelopment area, conservation area or rehabilitation district created by a city or county, pursuant to §36-1 et seq. Documentation must show area boundaries and support that the development lies within those boundaries. (10 points)

4. The development is located in a Housing Rehabilitation Zone established through an ordinance created by a city, county or town pursuant to §36-55.64. Documentation must include a copy of the ordinance with support that the development lies within the Rehabilitation Zone. (15 points)

5. The development is located in a defined revitalization area. Documentation must include a resolution from the locality supporting the development's s location within the revitalization area. See language below. (15 points)

   The above-referenced development is located in a Revitalization Area in the Town/City/County of _____, Virginia. The revitalization area is (i) ***either*** *(1) blighted, deteriorated, deteriorating or, if not rehabilitated, likely to deteriorate by reason that the buildings, improvements or other facilities in such area are subject to one or more of the following conditions- dilapidation, obsolescence, overcrowding, inadequate ventilation, light or sanitation, excessive land coverage, deleterious land use, or faulty or otherwise inadequate design, quality or condition,* ***or*** *(2) the industrial, commercial or other economic development of such area will benefit the city or county but such area lacks the housing needed to induce manufacturing, industrial, commercial, governmental, educational, entertainment, community development, healthcare or nonprofit enterprises or undertakings to locate or remain in such area;* ***and*** *(ii) private enterprise and investment are not reasonably expected, without assistance, to produce the construction or rehabilitation of decent, safe and sanitary housing and supporting facilities that will meet the needs of low and moderate income persons and families in such area and will induce other persons and families to live within such area and thereby create a desirable economic mix of residents in such area.*

   Delete the language that does not apply, (i)(1) or (i)(2) above.

6. The development is located in a Qualified Opportunity Zone and has a binding commitment of funding. Documentation must include a firm commitment of funding from a Qualified Opportunity Fund (QOF). Evidence of the self-certification to become a QOF must be provided with the commitment for funding. (15 points)

D. Subsidized Funding Information

Subsidized Funding Clarification

Any (i) funding source, as evidenced by a binding commitment or letter of intent, that is used to reduce the credit request, (ii) a commitment to donate land, buildings or tap fee waivers from the local government, or (iii) a commitment to donate land (including a below market rate land lease) from an entity that is not a principal in the applicant (the donor being the grantee of a right of first refusal or purchase option, with no ownership interest in the applicant, shall not make the donor a principal in the applicant). Loans must be below market-rate (the 1-year LIBOR rate at the time of commitment) or cash-flow only to be eligible for points. Financing from the Authority and market rate permanent financing sources are not eligible. (The amount of such funding, dollar value of local support, or value of donated land (including a below market rate land lease) will be determined by the executive director and divided by the total development cost. The applicant receives two points for each percentage point up to a maximum of 40 points.) The Authority will confirm receipt of such subsidized funding prior to the issuance of IRS Form 8609.

An existing RD loan transferred to a new owner is not eligible for these points.

All commitments must have supporting documentation.

Firm commitment(s) for the following funding sources must include the following:

1. **Local government funding**- documentation must include a resolution passed by the locality in which the proposed development is to be located committing such financial support to the development in a form approved by Virginia Housing
2. **Local government donations** - a commitment to donate land, buildings or tap fee waivers
3. **Donation of land, not from a local government** - a commitment to donate land (including a below market rate land lease) from an entity (not a local government) that is not a principal in the applicant (the donor being the grantee of a right of first refusal or purchase option, with no ownership interest in the applicant, shall not make the donor a principal in the applicant). The value of donated land (including a below market rate land lease) will be based on the most recent locality tax assessment.

The commitment/obligation may contain conditions, but only within the control of or based upon the performance of the borrower, not the benefactor.

E. Brick Calculation

Brick Calculation

Brick or other similar low maintenance material approved by the Authority covering twenty-five percent (25%) or greater, up to and including eighty-five percent (85%), of the exterior walls of the development. For purposes of making such coverage calculation, the triangular gable end area, doors, windows, knee walls, columns, retaining walls and any features that are not a part of the façade are excluded from the denominator. Community buildings are included in the foregoing coverage calculation. (Zero points if coverage is less than twenty-five percent (25%), 10 points if coverage is at least twenty-five percent (25%) and an additional 15 points is available on a sliding scale if coverage is greater than twenty-five percent (25%) up to and including eighty-five percent (85%) coverage. No additional points if coverage is greater than eighty-five percent (85%).

Other Similar Low-Maintenance Material list

The below will only be allowed with a satisfactory drainage plan presented to Virginia Housing no later than the pre-construction meeting:

- Natural Face Stone
- Natural Stone Veneer or other masonry can be used for up to 35% of the total building

F. Baseline Energy Efficiency Requirement

Baseline requirement for all tax credit developments in Virginia

Certification must be completed by a third party, independent, non-affiliated certified RESNET rater. All raters must submit to the owner, to be included in the application, a signed Virginia Housing RESNET Rater form and a HERS report from an energy rating software program listed on the National Registry of Accredited Rating Software Programs. All raters certifying a property must be authorized to conduct business in Virginia.

New Construction

Must become Energy Star Certified using appropriate program for development as defined annually by Energy Star- Reservation application will include the Virginia Housing RESNET Certification and HERS report. 8609's will not be issued until the Energy Star Certification is presented to the Virginia Housing Tax Credit Allocation Department.

Rehabilitation-

30% performance increase over existing, based on HERS Index or, must evidence a HERS Index of 80 or lower-Reservation application will include the Virginia Housing RESNET Certification and HERS report. 8609's will not be issued until a notarized final Virginia Housing RESNET Certification is received.

Adaptive Reuse-

Must achieve a HERS Index of 95 or lower. Reservation application will include the Virginia Housing RESNET Certification and HERS report. 8609's will not be issued until a notarized final Virginia Housing RESNET Certification is received.

Certified Provider list

Virginia Housing recognizes all providers listed on the National Registry of Accredited Rating Providers. http://www.resnet.us/professional/programs/search_directory

NOTE: The HERS report should be completed for the whole development, and should show both baseline HERS and expected target score at Reservation, not just 8609.

G. Green Certification Options and Amenity Item Clarification

Additional Certification- Choose one: All requirements must be verified by a third party independent non-affiliated certified RESNET rater, rater must be listed by a provider on the Virginia Housing certified Provider list. All Raters must submit with the application a signed Virginia Housing RESNET Rater form. All raters certifying a property for Virginia LIHTC must be authorized to conduct business in Virginia and certified to complete all information for chosen additional certification. Chosen certification and notarized Final Virginia Housing RESNET Certification must be received prior to 8609's issuance or penalties will be applied.

1. LEED Certification- Certification must be presented to Virginia Housing
2. Earth Craft Certification Gold or above- Certification must be presented to Virginia Housing
3. Enterprise Green Communities Certification- Certification must be presented to Virginia Housing
4. National Green Building Standard- Silver or above- Certification must be presented to Virginia Housing

Future Points

Points will be awarded to a developer that can provide certification for meeting one of the following. A document will be issued to the owner entity of the development to be used in one future application. The document is valid for 3 years and is non-transferrable.

1. Passive House-points for future applications after proof a development has become Passive House certified.
2. Zero Energy Ready Homes (ZERH) Certification from Department of Energy- points for future application after proof a development has received the Zero Energy Ready homes certification from Department of Energy.

Energy Efficiency Bonus options

Dehumidification options

Rehab only- Provide dedicated space, drain and electrical hookups for possible future permanently installed dehumidification system. Primary apartment HVAC system does not qualify as a dehumidification system. Portable dehumidification models are not permitted. Equipment may not be set in a primary living space and must be concealed in a wall cavity (preferred) or a secondary space that easily communicates air with the rest of the unit.

OR

All Development types- Each apartment is equipped with a permanent dehumidification system - Provide permanently installed dehumidification system that does not require manual disposal of condensation. System to include humidistat control. Primary apartment HVAC does not qualify as a dehumidification system. Portable dehumidification models are not permitted. Equipment may not be set in a primary living space. Independent dehumidification systems must be concealed in a wall cavity (preferred) or a secondary space that easily communicates air with the rest of the unit. A balanced, whole-building Dedicated Outdoor Air System (DOAS) with humidity control is acceptable.

WaterSense labeled toilets, faucets and showerheads- These points are only available to those applications not choosing an additional certification. Every unit in the development will have bathroom(s) containing only Water Sense labeled faucets, showerheads and toilets.

In every unit, all bathrooms will have either intermittent exhaust by a bath fan with delay timer wired to the primary light or a bath fan with humidistat, or, continuous exhaust by an ERV or DOAS. Units may have combinations but each bathroom must have its own individual exhaust. User controlled interfaces are not allowed

Amenity Item Clarification

Internet Service Provided must be 10 Mbps download and 3 Mbps upload

Free individual Wi-Fi - Wi-Fi internet service will be provided for all units. Must provide a resident internet education information, draft resident acknowledgment form, and internet security plan at time of application. Resident education and form must be included in all resident files.

Broadband/high-speed internet service will be provided for all units. Must provide a resident internet education information, draft resident acknowledgment form, and internet security plan at time of application. Resident education and form must be included in all resident files.

Free community room Wi-Fi restricted to development residents – Service is required to have a rotating password and only accessible to residents. Application must include resident internet education information, draft resident acknowledgment form and internet security plan at time of application. Resident education information and draft resident acknowledgment form must be included in all resident files.

Additional point Items:

Solid Core Doors- All interior doors within apartment will be solid core. Solid wood doors will meet this requirement.

USB Ports- In all units, minimum one USB charging port, will be provided in Kitchen, Living room and all bedrooms.

LED Kitchen Lighting- All Kitchen light fixtures are LED and will meet the MDCR lighting guidelines.

Outside unit entry ledge- Shelf or ledge outside each unit entry door located in an interior hallway. Must have capacity to hold 50 pounds or more. Size and design must allow for temporary storage of items, must include hooks and do not obstruct accessible route. Unit entry ledges must be at 48” maximum above finished floor.

Balconies- New Construction only- Each unit will have balcony or patio with a minimum depth 5’ clear from the face of building. Minimum 30 square feet clear area. All balconies are to follow applicable accessibility standards.

Fire Suppression – All unit kitchens to include over the range fire suppression features such as canisters, etc.

Fire Prevention – All units will have ranges to be certified to UL858 standards or features limiting the high end temperature of the stovetop below the auto-ignition point of most cooking oils.

H. Developer Fee and Deferred Developer Fee Guidelines

Deferred Developer Fee Requirements

The application must include the proposed deferred developer fee loan amount. If more than 50% of the developer fee is being deferred, provide evidence the property can support repayment within 15 years in the cash flow analysis. Documentation must be provided clearly showing the deferred developer fee is bona fide debt; this may include a Note or other documentation as approved by the Authority and will be accepted up to 8609 issuance.

Developer Fee Requirements

The maximum allowable developer fee amounts are an 'up-to' amount. If documentation cannot be provided to support requesting the maximum amount allowable, the amount of developer fee in basis may be reduced. The developer fee may be reduced if it is an outlier for services provided. The fee amount cannot increase after Reservation without prior approval.

Applicants must provide a draft development fee agreement with the reservation application. The final version of the agreement is due with the 8609 application. The development fee agreement must clearly state what services the fee is funding. If services are included that are not allowable in basis, the fee in basis may be reduced. Supporting documentation to specify the breakdown of the fee for services is preferable.

I. Accessible Supportive Housing Pool Requirements

Accessible Supportive Housing (ASH) Guidelines

The ASH pool applications are now due with the 9% competitive round. You must ensure the application is received prior to the competitive deadline set in the manual. The credits in this pool will continue to be a forward allocation and deals competing and winning credits from this pool will receive a Carryforward the following year.

Ownership structure must demonstrate capacity for service-enriched housing through a CORES certification or other pre-approved source. CORES certifies three models of service-enriched housing and a certification under any of the three models fulfills this requirement. If you plan to provide a different certification you will need to submit it to the tax credit allocation department at least 30 days prior to the application deadline for review and possible approval.

The ASH application must include the Virginia Housing Permanent Supportive Housing certification. It must be signed by the Owner and the identified service provider or be signed by the Owner and have an accompanying MOU with a service provider.

A minimum of 15% of the units must conform to HUD regulations interpreting the accessibility requirements of section 504 of the Rehabilitation Act and be actively marketed to people with disabilities in accordance with a plan submitted as part of the application for credits. Also, the application must include documentation of a binding form of rental assistance in order to ensure occupancy by extremely low-income persons.

If the applicant does not meet the minimum requirements in the ASH Pool or there are not enough credits to fully fund all developments, the developments not receiving an award of credits from the ASH pool will automatically compete in the applicable geographic pool.

J. General Contractor Cost Certification Guidelines

Virginia Housing

Cost Certification Preparation Guideline Tax Credit Program

COST CERTIFICATION PREPARATION GUIDELINE

PURPOSE

This Guide sets forth (a) the standards to be followed in the preparation of Cost Certifications and in the conduct of the audits, and (b) the minimum scope of audit and report format acceptable to The Virginia Housing Development Authority. It does not provide detailed audit procedures nor is it intended to supplant the Certified Public Accountants' (CPA) judgment as to the work required. This Guide is applicable to audits of General Contractors' and LIHTC cost certifications as required for developments receiving Low-Income Housing Tax Credits (LIHTCs).

The purpose of the cost certification is to establish the total costs incurred by the contractor and the LIHTC recipient to complete the development so that Virginia Housing may determine the final amount of the annual allocation of LIHTCs for the development.

The cost certification audits must be completed by an independent, third party Certified Public Accountant ("CPA") who is familiar with the requirements of Section 42 of the Internal Revenue Code.

Because of the complexity of the rules governing the LIHTC program, all participants are urged to seek appropriate legal and accounting advice regarding construction-related matters.

I. Requirements

All developments containing LIHTC's, are required to complete General Contractor's and LIHTC Cost Certifications accompanied by the 8609 Application.

The Contractor's and LIHTC Cost Certifications must be prepared by an independent, third-party CPA. The certifications must be prepared in accordance with Generally Accepted Accounting Standards, Generally Accepted Government Audit Standards, and audit standards acceptable to the American Institute of Certified Public Accountants. The certifications must be accompanied by an Independent Auditor's Report, including the unqualified opinion of the CPA.

The Cost Certifications completed by the CPAs must be submitted on the forms provided by Virginia Housing in the 8609 Application. The CPA's cost certification should follow the General Contractor's and the LIHTC Cost Certification Worksheet line items to eliminate delays in the review of the cost certification. Variation to this format may result in the return and required re-submission of the cost certification. The Building by Building Information sheet is to be completed in 8609 Application.

The General Contractor's Cost Certification shall not be prepared by the same CPA preparing the LIHTC Cost Certification. It is acceptable for the same CPA firm to prepare both certifications as long as different accountants are preparing them.

II. ELIGIBLE COSTS

Eligible costs are those approved costs that have been or will be incurred within 120 days after the date of Substantial Completion. In the event that the project is financed in whole or in part with the proceeds of tax exempt bonds issued pursuant to Section 142 of the IRC, certain restrictions and limitations apply with respect to the costs or the portions thereof which are includable in the total development cost. Such restrictions and limitations shall control in the event of any conflict or inconsistency with any other provisions of this Guide.

Eligible costs may include all costs paid in cash under the terms of the construction contract. The contract price may be amended for approval change orders, and reduced for liquidated damages as required by the contract. In addition, eligible costs may include various Fees, Finance and Carrying Charges, and other cost categories as identified in the most recent approved Development Budget.

Total development costs may include but are not limited to:

- Construction costs
- Architect fees
- Professional fees, such as legal and accounting, appraisal and market study, engineering and survey
- Furniture and equipment
- Construction period interest and fees
- Financing expenses, including loan application fees, loan origination fees, and mortgage Insurance premium
- Tax Credit allocation and monitoring fees
- Compliance monitoring fee
- Rent-up expenses
- Relocation expenses
- Contingencies, either for construction or soft costs

III. ELIGIBLE BASIS

Eligible basis is the cost of new construction, acquisition of existing property and the cost of any improvements to that property (Joint Committee Report on the LIHTC).

Eligible basis may include:

- Building Acquisition
- Local Impact Fees
- Construction Costs
- Soft Costs: architect, legal, permitting, clerk of the works, survey, etc.
- Refrigerators, stoves, air conditioners
- Parking lots, roads "closely associated" with the use of the building
- Grading and landscaping "closely associated" with the use of the building
- Capitalized interest including amortization of loan costs
- Developer Fees
- Amenities (swimming pool/recreational facilities)

Eligible basis does not include:

- Cost of land
- Loan costs and fees (unless related to construction loans)
- State Housing Compliance Fees
- Marketing/Advertising
- Operating Expenses during construction
- Reserves
- Parking, roads, grading, and not integral to the building
- Landscaping not adjacent to the building (trees along property line not eligible)
- Rent-up Costs
- Relocation
- Organization and syndication costs
- Developments fees allocable to land acquisition and other in-eligible project costs
- Construction Contingency (contingency should be reclassified by client to actual category)

The above list is not exhaustive and will be reviewed on a case by case basis in accordance with Section 42 of the IRC.

IV. 8609 Application/Cost Certification Process

No more than 180 days after construction completion of the last building the 8609 Application must be submitted along with supporting documentation, LIHTC and Contractors Cost Certification.

Consistent with Section 42(m)(2) of the Internal Revenue Code and industry best practices, Virginia Housing limits the award of LIHTC and other State controlled resources to the funding gap necessary to make a transaction viable. Even if a specific line item is not being paid with LIHTC equity or Virginia Housing funds, any excessive cost, regardless of the source of financing, increases the gap and affects the public subsidy needed by a transaction. As a result, Virginia Housing reserves the right to require a justification of any development cost line item.

These Guidelines are to be incorporated into the Virginia Housing LIHTC Tax Credit Manual, as amended.

V. General Contractor's Cost Certification Instructions

For each Construction item the CPA must submit a schedule of costs, which includes monies paid to vendor(s), as well as general requirements, builder's overhead and profit, building permit and other fees, bond premium costs and any approved change orders (if applicable). The certification should include cost determinations for construction costs associated with the development including designated punch list items and allowances for seasonal work.

The General Contractor's Cost Certification must follow the General Contractor's Cost Certification Worksheet Form. The Certification must be signed by the General Contractor/Construction Manager and the signature must be notarized. The Certification must be submitted with the 8609 Application as a mandatory item.

VERSION 1.2019

Virginia Housing
General Contractor's Cost Certification Worksheet

VHDA Deal #

VHDA Number:

Deal Name:

Location:

Owner:

Contractor:

GROUP	TRADE ITEM	COST	DESCRIPTION	NAME OF SUB-CONTRACTOR
02	Existing Conditions	$0		
03	Concrete	$0		
04	Masonry	$0		
05	Metals	$0		
06	Woods, Plastics and Composites	$0		
07	Thermal and Moisture Protection	$0		
08	Openings	$0		
09	Finishes	$0		
10	Specialties	$0		
11	Equipment	$0		
12	Furnishings	$0		
13	Special Construction	$0		
14	Conveying Equipment	$0		
21	Fire Protection	$0		
22	Plumbing	$0		
23	Heating, Ventilation and AC	$0		
26	Electrical	$0		
27	Communications	$0		
28	Electronic, Safety and Security	$0		
91	Other * (editable as needed by Deal)	$0		
92	Other * (editable as needed by Deal)	$0		
93	Other * (editable as needed by Deal)	$0		
	TOTAL STRUCTURES	**$0**		
31	Earthwork	$0		
32	Exterior Improvements	$0		
33	Site Utilities	$0		
94	Other * (editable as needed by Deal)	$0		
	TOTAL LAND IMPROVEMENTS	**$0**		
	*** = Provide Detail**			

TOTAL STRUCTURE AND LAND IMPROVEMENTS	**$0**	**Bond Premiums**	$0
GENERAL REQUIREMENTS	$0	**Tap Fees**	$0
SUBTOTAL	**$0**	**Building Permits**	$0
OVERHEAD	$0	**Soil Borings**	$0
PROFIT	$0	**Total Contract Amount**	**$0**
TOTAL FOR ALL IMPROVEMENTS	**$0**		

Date: By:

CONTRACTOR

Date: By:

CERTIFIED PUBLIC ACCOUNTANT

K. Credit Refresh Process

Credit Refresh Process

Requests must be made using the Virginia Housing Change Request form.

Requests can only be made for developments that have met their 10% test, unless you received a prior approval through a Change Request. Requests will be processed September 1 through September 30, however, you may notify Virginia Housing of intent to request at any time. The Consent to Cancel must be formalized by November 1.

Principals of any applicant requesting a refresh of credits will not be eligible to apply for credits in the following year's competitive round and will waive their right to pursue a Qualified Contract.

Credits that are refreshed will be issued for current year credits (if request is made in September 2021, then 2021 credits will be issued).

L. Income Averaging

Note: Income Averaging changes may be reflected by time of placed in service, as a result of IRS guidance or requirements.

Income Averaging Guidelines

A minimum of 20% of the units must be occupied by households with incomes at or below 50% of the area median gross income (AMGI), as adjusted for family size; OR, a minimum of 40% of the units must be occupied by households, with incomes at or below 60% of the AMGI, adjusted for family size; OR, under the Average Income Test, forty percent (40%) or more (25% or more in the case of a project described in Section 142(d)(6)) of the residential units in the project must be both rent restricted and occupied by individuals whose income does not exceed the imputed income limitation designated by the taxpayer with respect to the respective unit. The average of the imputed income limitations designated must not be more than 60% of the area median gross income. The designated imputed income limitation of a unit can only be 20%, 30%, 40%, 50%, 60%, 70%, or 80% of the area median gross income and must be as designated with Virginia Housing in writing. The development must comply with these income restrictions within 12 months of the placed-in-service date (slight variations apply when a development has more than one building). This is commonly referred to as the "20-50", "40-60", or "Average Income" test.

Income averaging is permitted for all future developments. Projects already approved for funding will be reviewed on a case by case basis. The following are minimum requirements for selecting income averaging:

- 100% Low Income – No Market Units
- Line 8b of the 8609 form must be selected for Multiple Building Election
- Initial Unit Mix Showing the Average Set-Aside must be provided
- For deals that were funded prior to January 1, 2019, the Owner must forfeit the right to pursue a Qualified Contract
- Assigned Unit Set Asides Must Float
- Must Have a Reasonable Distribution of Set-Asides Across All Unit Sizes

Tax Credit Developments in the Extended Use period may elect this minimum set-aside but the existing EUA will not be terminated or amended.

There will be no compliance monitoring change to the following:

- Virginia Housing audit cycle or sample size
- 100% tax credit properties must complete one full annual certification
- Tax Exempt Bond minimum set-aside requirements when combined with tax credits

An Average Income Memo and Video Playlist with guidance is posted on the Virginia Housing website.

M. Rules of Ranking

Low-Income Housing Tax Credit Pools: Rules of Ranking

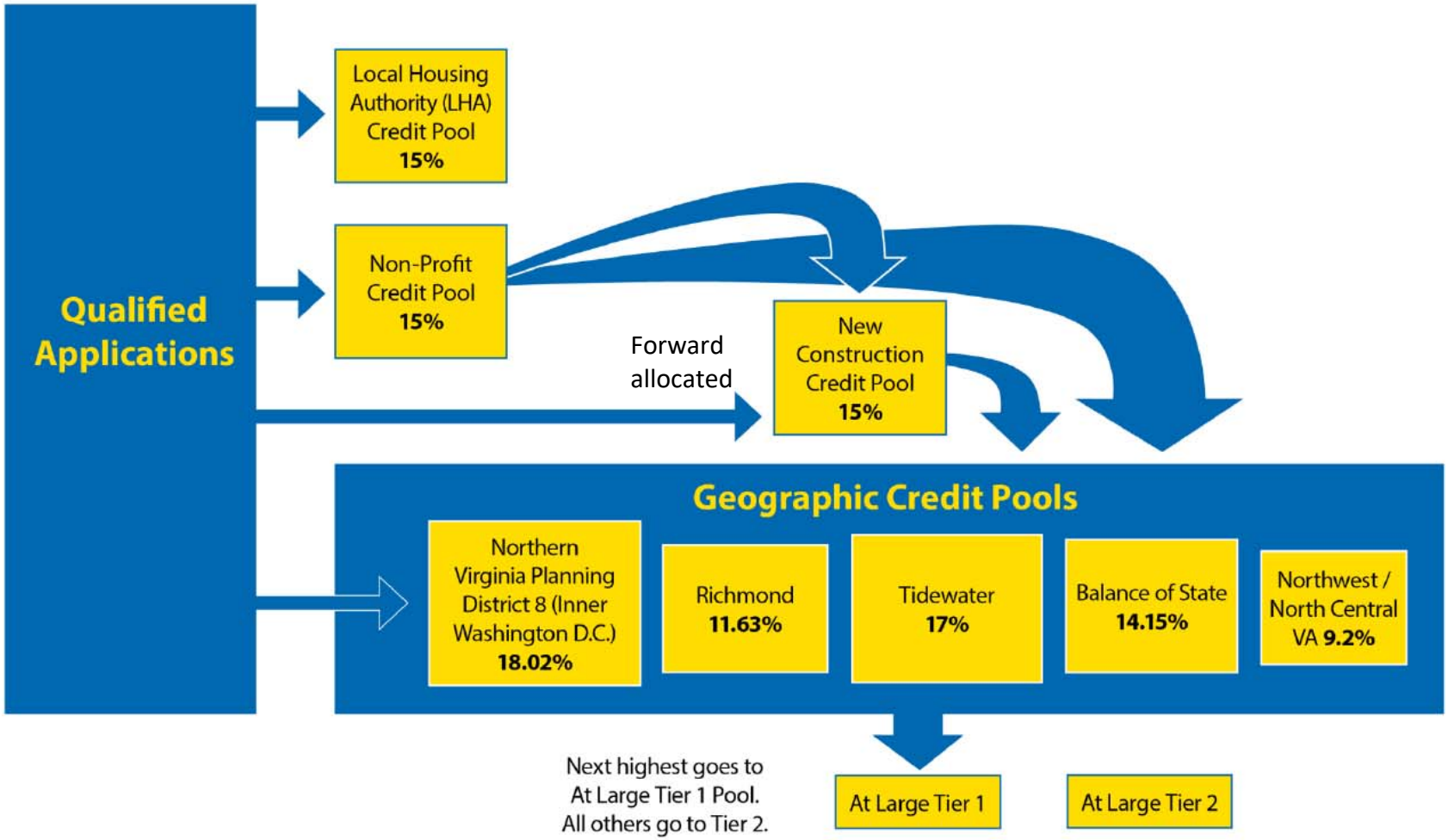

N. Compliance Monitoring

Compliance Monitoring

The federal Low-Income Housing Tax Credit (LIHTC) Program is sponsored by the U.S. Treasury Department and administered in Virginia through Virginia Housing. The program is authorized under Section 42 of the Internal Revenue Code of 1986 to encourage development of affordable rental housing by providing property owners with federal income tax credit. VHDA's Compliance department monitors properties that have received LIHTC by periodically reviewing that qualified units provide safe, decent and affordable housing and that eligible renters occupy these units.

To maintain qualified tax credits, in addition to other program requirements (we strongly encourage owners to review Section 42 of the IRS Code and their Extended Use Agreement for specific eligibility requirements), owners must meet the general guidelines listed below:

Income Restrictions

A minimum of 20% of the units must be occupied by households with incomes at or below 50% of the area median gross income (AMGI), as adjusted for family size; OR, a minimum of 40% of the units must be occupied by households, with incomes at or below 60% of the AMGI, adjusted for family size; OR, under the Average Income Test, forty percent (40%) or more (25% or more in the case of a project described in Section 142(d)(6)) of the residential units in the project must be both rent restricted and occupied by individuals whose income does not exceed the imputed income limitation designated by the taxpayer with respect to the respective unit. The average of the imputed income limitations designated must not be more than 60% of the area median gross income. The designated imputed income limitation of a unit can only be 20%, 30%, 40%, 50%, 60%, 70%, or 80% of the area median gross income and must be as designated with Virginia Housing in writing. The development must comply with these income restrictions within 12 months of the placed-in-service date (slight variations apply when a development has more than one building). This is commonly referred to as the "20-50", "40-60", or "Average Income" test.

Rent Restrictions

Rents on qualified tax credit units are restricted. Maximum allowable rent is based on the number of bedrooms and AMI as established annually by HUD. If a household pays for utilities, the maximum rent must be adjusted by the applicable utility allowance.

O. Previous Participation Certification

Previous Participation Certification Instructions

General Instructions:

The following certification:

- Must be completed, regardless of any principal's inclusion on the Developer Experience List.
- Must be signed by an individual who is, or is authorized to act on behalf of, the Controlling General Partner (if LP) or Managing Member (if LLC) of the Applicant, as designated in the partnership agreement. Virginia Housing will accept an authorization document, which gives signatory authorization to sign on behalf of the principals.
- Must be dated no more than 30 days prior to submission of the LIHTC Application.

Definitions:

Development - the proposed multifamily rental housing development

Participants - the principals who will participate in the ownership of the development

Principal - any person (including any individual, joint venture, partnership, limited liability company, corporation, nonprofit organization, trust, or any other public or private entity) that (i) with respect to the proposed development, will own or participate in the ownership of the proposed development or (ii) with respect to an existing multifamily rental property, has owned or participated in the ownership of such property, all as more fully described herein below. The person who is the owner of the proposed development or multifamily rental property is considered a principal. In determining whether any other person is a principal, the following guidelines shall govern:

- In the case of a partnership which is a principal (whether as the owner or otherwise), all general partners are also considered principals, regardless of the percentage interest of the general partner;
- In the case of a public or private corporation or organization or governmental entity that is a principal (whether as the owner or otherwise), principals also include the president, vice president, secretary, and treasurer and other officers who are directly responsible to the board of directors or any equivalent governing body, as well as all directors or other members of the governing body and any stockholder having a 25% or more interest;
- In the case of a limited liability company (LLC) that is a principal (whether as the owner or otherwise), all members are also considered principals, regardless of the percentage interest of the member;
- In the case of a trust that is a principal (whether as the owner or otherwise), all persons having a 25% or more beneficial ownership interest in the assets of such trust;
- In the case of any other person that is a principal (whether as the owner or otherwise), all persons having a 25% or more ownership interest in such other person are also considered principals; and

Instructions, cont'd

- Any person that directly or indirectly controls, or has the power to control, a principal shall also be considered a principal.

Please follow guidelines below for listing principals.

- If the owner is a partnership, list the names of all GPs, regardless of % interest in the General Partnership
- If the owner is an LLC, list the names of all members regardless of % interest
- If the owner is a Corporation (public or private), Organization or Governmental Entity, list the names of officers who are directly responsible to the Board of Directors (or equivalent) and any stockholder having a 25% or more interest
- If the owner is a Trust, list the names of all persons having a 25% or more beneficial ownership interest in the assets of the trust
- If the owner is an Individual, list the name of anyone having a 25% or more ownership interest of the named individual

If none of the above applies, list the name of any person that directly or indirectly controls or has the power to control a principal.

If you have any questions, please call the Tax Credit Allocation Department at (804) 343-5518.

Previous Participation Certification

Development Name: _____

Name of Applicant (entity): _____

_____

I hereby certify that:

1. All the statements made by me are true, complete and correct to the best of my knowledge and belief and are made in good faith, including the data contained in Schedule A and any statements attached to this certification.

2. During any time that any of the participants were principals in any multifamily rental property, no property has been foreclosed upon, in default or assigned to the mortgage insurer (governmental or private); nor has mortgage relief by the mortgagee been given;

3. During any time that any of the participants were principals in any multifamily rental property, there has not been any breach by the owner of any agreements relating to the construction or rehabilitation, use, operation, management or disposition of the property, including removal from a partnership;

4. That at no time have any principals listed in this certification been required to turn in a property to the investor or have been removed from a multifamily rental property ownership structure;

5. That to the best of my knowledge, there are no unresolved findings raised as a result of state or federal audits, management reviews or other governmental investigations concerning any multifamily rental property in which any of the participants were principals;

6. During any time that any of the participants were principals in any multifamily rental property, there has not been a suspension or termination of payments under any state or federal assistance contract for the property;

7. None of the participants has been convicted of a felony and is not presently, to my knowledge, the subject of a complaint or indictment charging a felony. A felony is defined as any offense punishable by imprisonment for a term exceeding one year, but does not include any offense classified as a misdemeanor under the laws of a state and punishable by imprisonment of two years or less;

8. None of the participants has been suspended, debarred or otherwise restricted by any federal or state governmental entity from doing business with such governmental entity; and

Previous Participation Certification, cont'd

9. None of the participants has defaulted on an obligation covered by a surety or performance bond and has not been the subject of a claim under an employee fidelity bond.

10. None of the participants is a Virginia Housing employee or a member of the immediate household of any of its employees.

11. None of the participants is participating in the ownership of a multifamily rental housing property as of this date on which construction has stopped for a period in excess of 20 days or, in the case of a multifamily rental housing property assisted by any federal or state governmental entity, which has been substantially completed for more than 90 days but for which requisite documents for closing, such as the final cost certification, have not been filed with such governmental entity.

12. None of the participants has been found by any federal or state governmental entity or court to be in noncompliance with any applicable civil rights, equal employment opportunity or fair housing laws or regulations.

13. None of the participants was a principal in any multifamily rental property which has been found by any federal or state governmental entity or court to have failed to comply with Section 42 of the Internal Revenue Code of 1986, as amended, during the period of time in which the participant was a principal in such property. This does not refer to corrected 8823's.

14. None of the participants is currently named as a defendant in a civil lawsuit arising out of their ownership or other participation in a multi-family housing development where the amount of damages sought by plaintiffs (i.e., the ad damnum clause) exceeds One Million Dollars ($1,000,000).

15. None of the participants has pursued a Qualified Contract or planned foreclosure in Virginia after January 1, 2019.

Statements above (if any) to which I cannot certify have been deleted by striking through the words. In the case of any such deletion, I have attached a true and accurate statement to explain the relevant facts and circumstances.

Failure to disclose information about properties which have been found to be out of compliance or any material misrepresentations are grounds for rejection of an application and prohibition against future applications.

_____

Signature

_____

Printed Name

_____

Date (no more than 30 days prior to submission of the Application)

P. Site Control Documentation

Site Control Documentation

Site control documentation must be in one of the following forms:

- Sole fee simple ownership of the site of the proposed development by the applicant, OR
- Lease of such site by the applicant for a term exceeding the compliance period (as defined in the IRC) or for such longer period as the applicant represents in the application that the development will be held for occupancy by low-income persons or families, OR
- Right to acquire or lease such site pursuant to a valid and binding written option or contract between the applicant and the fee simple owner of such site.

The option or contract shall have no conditions within the discretion or control of the site owner. Any contract for the acquisition of a site with existing residential property may not require an empty building as a condition of such contract, unless relocation assistance is provided to displaced households, at such level required by Virginia Housing. Please refer to the Virginia Housing Relocation Assistance Guidelines.

In the case of acquisition and rehabilitation of developments funded by Rural Development of the U.S. Department of Agriculture ("Rural Development"), any site control document subject to approval of the partners of the seller does not need to be approved by all partners of the seller if the general partner of the seller executing the site control document provides (i) an attorney's opinion that such general partner has the authority to enter into the site control document and such document is binding on the seller or (ii) a letter from the existing syndicator indicating a willingness to secure the necessary partner approvals upon the reservation of credits.

If the site control document does not clearly state the price but rather 'an assumption of outstanding debt', documentation must be provided to show the value of the outstanding debt.

Q. RESNET Rater Certification

Appendix F

RESNET Rater Certification of Development Plans

I certify that the development's plans and specifications incorporate all items for the required baseline energy perfomance as indicated in Virginia's Qualified Allocation Plan (QAP).
In the event the plans and specifications do not include requirements to meet the QAP baseline energy performance, then those requirements still must be met, even though the application is accepted for credits.

***Please note that this may cause the Application to be ineligible for credits. The Requirements apply to any new, adaptive reuse or rehabilitated development (including those serving elderly and/or physically disabled households).

In addition provide HERS rating documention as specified in the manual

New Construction - EnergyStar Certification
The development's design meets the criteria for the EnergyStar certification.
Rater understands that before issuance of IRS Form 8609, applicant will obtain and provide EnergyStar Certification to VHDA.

Rehabilitation -30% performance increase over existing, based on HERS Index
Or Must evidence a HERS Index of 80 or better
Rater understands that before issuance of IRS Form 8609, rater must provide Certification to VHDA of energy performance.

Adaptive Reuse - Must evidence a HERS Index of 95 or better.
Rater understands that before issuance of IRS Form 8609, rater must provide Certification to VHDA of energy performance.

Additional Optional Certifications

I certify that the development's plans and specifications incorporate all items for the certification as indicated below, and I am a certified verifier of said certification. In the event the plans and specifications do not include requirements to obtain the certification, then those requirements still must be met, even though the application is accepted for credits. Rater understands that before issuance of IRS Form 8609, applicant will obtain and provide Certification to VHDA.

FALSE **Earthcraft Certification -** The development's design meets the criteria to obtain EarthCraft Multifamily program Gold certification or higher

FALSE **LEED Certification** - The development's design meets the criteria for the U.S. Green Building Council LEED green building certification.

FALSE **National Green Building Standard (NGBS) -** The development's design meets the criteria for meeting the NGBS Silver or higher standards to obtain certification

FALSE **Enterprise Green Communities -** The developmen's design meets the criteria for meeting meeting the requirements as stated in the Enterprise Green Communities Criteria for this developments construction type to obtain certification.

*****Please Note Raters must have completed 500+ ratings in order to certify this form**

Signed: _____

Date: _____ **Printed Name:** _____

RESNET Rater

Resnet Provider Agency

_____ **Signature** _____

Provider Contact and Phone/Email _____

Final RESNET Rate **Certification of Development**

I certify that the development incorporates all items for the required baseline energy performance as indicated in Virginia's Qualified Allocation Plan (QAP).
I certify that the energy data entered into any system was not entered in by another party.
I certify the development has obtained the measurement as indicated below.

In addition provide HERS rating documention as specified in the manual

☐ **New Construction -** EnergyStar Certification
The development's design meets the criteria for the EnergyStar certification.

☐ **Rehabilitation** -30% performance increase over existing, based on HERS Index
Or Must evidence a HERS Index of 80 or better
Beginning HERS rating ☐
Final HERS rating ☐

☐ **Adaptive Reuse -** Must evidence a HERS Index of 95 or better.

Additional Optional Certifications
I certify the development has met all the requirements of the certification chosen below and all data was not entered or submitted by another party

☐ **Earthcraft Certification** level ☐
The development has obtained the EarthCraft Certification of

☐ **LEED Certification** level ☐
The development has obtained the Green Building Council LEED certification.

☐ **National Green Building Standard (NGBS) -**
The development has been certifed to the NGBS standards and received certification

☐ **Enterprise Green Communities** level ☐
The development has been certified as an Enterprise Green Community

Date: _____ **Signed:** _____

Printed Name: _____

My notary seal is affixed below:

_____
RESNET Rater
Signature

The foregoing instrument was acknowledged before me this ____day of _____, 20____
by_____(Name)

Notary Public: _____ My commission expires: _____
My notary registration number is: _____

R. Attorney's Opinion

Attorney's Opinion Letter

General Instructions:

1. This Opinion must be included with application.

2. This Opinion must be submitted under law firm's letterhead.

3. Any changes to this form, other than filling in blanks or making the appropriate selections in bracketed language, **must be** accompanied by a black-lined version indicating all additional changes to the opinion. Altered opinions are subject to acceptance by the Authority and **must be** approved prior to the application deadline. Submit the approval with the changes indicated with the final Attorney's Opinion.

4. **Be aware that there is a 9% version and a Tax Exempt version.** The Tax Exempt version is noted in the footer. Be sure to use the correct version or the application may be subject to a penalty.

If you have any questions, please call the Tax Credit Allocation Department at (804) 343-5518.

DATE (Must be on or after the application date below)

TO: Virginia Housing Development Authority
601 South Belvidere Street
Richmond, Virginia 23220-6500

RE: 2021 Tax Credit Reservation Request

Name of Development: _____
Name of Owner: _____

Gentlemen:

This undersigned firm represents the above-referenced Owner as its counsel. It has received a copy of and has reviewed the completed application package dated _____ (of which this opinion is a part) (the "Application") submitted to you for the purpose of requesting, in connection with the captioned Development, a reservation of low income housing tax credits ("Credits") available under Section 42 of the Internal Revenue Code of 1986, as amended (the "Code"). It has also reviewed Section 42 of the Code, the regulations issued pursuant thereto and such other binding authority as it believes to be applicable to the issuance hereof (the regulations and binding authority hereinafter collectively referred to as the "Regulations").

Based upon the foregoing reviews and upon due investigation of such matters as it deems necessary in order to render this opinion, but without expressing any opinion as to either the reasonableness of the estimated or projected figures or the veracity or accuracy of the factual representations set forth in the Application, the undersigned is of the opinion that:

1. It is more likely than not that the inclusion in eligible basis of the Development of such cost items or portions thereof, as set forth in Parts VIII and IX of the Application form, complies with all applicable requirements of the Code and Regulations.

2. The calculations (a) of the Maximum Allowable Credit available under the Code with respect to the Development in Part VIII of the Application form and (b) of the Estimated Qualified Basis of each building in the Development in Part IX of the Application form comply with all applicable requirements of the Code and regulations, including the selection of credit type implicit in such calculations.

3. The appropriate type(s) of allocation(s) have been requested in Subpart I-D of the Application form.

4. The information set forth in Subpart VII-C of the Application form as to proposed rents satisfies all applicable requirements of the Code and Regulations.

5. The site of the captioned Development is controlled by the Owner, as identified in Subpart II-A of the Application, for a period of not less than four (4) months beyond the application deadline.

6. [Delete if inapplicable] The type of the nonprofit organization involved in the Development is an organization described in Code Section 501(c)(3) or 501(c)(4) and exempt from taxation under Code Section 501(a), whose purposes include the fostering of low-income housing.

7. [Delete if inapplicable] The nonprofit organizations' ownership interest in the development is as described in Subpart II-D of the Application form.

8. [Delete if inapplicable] It is more likely than not that the representations made under Subpart I-F of the Application form as to the Development's compliance with or exception to the Code's minimum expenditure requirements for rehabilitation projects are correct.

9. [Delete if inapplicable] After reasonable investigation, the undersigned has no reason to believe that the representations made under Subpart I-E of the Application form as to the Development's compliance with or eligibility for exception to the ten-year "look-back rule" requirement of Code §42(d)(2)(B) are not correct.

Finally, the undersigned is of the opinion that, if all information and representations contained in the Application and all current law were to remain unchanged, upon compliance by the Owner with the requirements of Code Section 42(h)(1)(E), the Owner would be eligible under the applicable provisions of the Code and the Regulations to an allocation of Credits in the amount(s) requested in the Application.

This opinion is rendered solely for the purpose of inducing the Virginia Housing Development Authority ("VHDA") to issue a reservation of Credits to the Owner. Accordingly, it may be relied upon only by VHDA and may not be relied upon by any other party for any other purpose.

This opinion was not prepared in accordance with the requirements of Treasury Department Circular No. 230. Accordingly, it may not be relied upon for the purpose of avoiding U.S. Federal tax penalties or to support the promotion or marketing of the transaction or matters addressed herein.

_____
Firm Name

By: _____

Its: _____
(Title)

Attorney's Opinion Letter

(This Form Must Be Included With Application - TAB W)

(This Opinion Must Be Submitted Under Law Firm's Letterhead - Any changes to the form of opinion other than filing in blanks or making the appropriate selections in bracketed language must be accompanied by a black-lined version indicating all additional changes to the opinion. Altered opinions will still be subject to acceptance by the Authority)

DATE

TO: Virginia Housing Development Authority
601 South Belvidere Street
Richmond, Virginia 23220

RE: 2021 Tax Credit Reservation Request

Name of Development: _____
Name of Owner: _____

Gentlemen:

This undersigned firm represents the above-referenced Owner as its counsel. It has received a copy of and has reviewed the completed application package dated _____ (of which this opinion is a part) (the "Application") submitted to you for the purpose of requesting, in connection with the captioned Development, a reservation of low income housing tax credits ("Credits") available under Section 42 of the Internal Revenue Code of 1986, as amended (the "Code"). It has also reviewed Section 42 of the Code, the regulations issued pursuant thereto and such other binding authority as it believes to be applicable to the issuance hereof (the regulations and binding authority hereinafter collectively referred to as the "Regulations").

Based upon the foregoing reviews and upon due investigation of such matters as it deems necessary in order to render this opinion, but without expressing any opinion as to either the reasonableness of the estimated or projected figures or the veracity or accuracy of the factual representations set forth in the Application, the undersigned is of the opinion that:

1. It is more likely than not that the inclusion in eligible basis of the Development of such cost items or portions thereof, as set forth in Parts VIII and IX of the Application form, complies with all applicable requirements of the Code and Regulations.

2. The calculations (a) of the Maximum Allowable Credit available under the Code with respect to the Development in Part VIII of the Application form and (b) of the Estimated Qualified Basis of each building in the Development in Part IX of the Application form comply with all applicable requirements of the Code and regulations, including the selection of credit type implicit in such calculations.

3. The information set forth in Subpart VII-C of the Application form as to proposed rents satisfies all applicable requirements of the Code and Regulations.

4. The site of the captioned Development is controlled by the Owner, as identified in Subpart II-A of the Application.

5. [Delete if inapplicable] The type of the nonprofit organization involved in the Development is an organization described in Code Section 501(c)(3) or 501(c)(4) and exempt from taxation under Code Section 501(a), whose purposes include the fostering of low-income housing.

6. [Delete if inapplicable] The nonprofit organizations' ownership interest in the development is as described in Subpart II-D of the Application form.

7. [Delete if inapplicable] It is more likely than not that the representations made under Subpart I-F of the Application form as to the Development's compliance with or exception to the Code's minimum expenditure requirements for rehabilitation projects are correct.

8. [Delete if inapplicable] After reasonable investigation, the undersigned has no reason to believe that the representations made under Subpart I-E of the Application form as to the Development's compliance with or eligibility for exception to the ten-year "look-back rule" requirement of Code §42(d)(2)(B) are not correct.

Finally, the undersigned is of the opinion that, if all information and representations contained in the Application and all current law were to remain unchanged, upon the placement in service of each building of the Development, the Owner would be eligible under the applicable provisions of the Code and the Regulations to an allocation of Credits in the amount(s) requested in the Application.

This opinion is rendered solely for the purpose of inducing the Virginia Housing Development Authority ("VHDA") to issue a reservation of Credits to the Owner. Accordingly, it may be relied upon only by VHDA and may not be relied upon by any other party for any other purpose.

This opinion was not prepared in accordance with the requirements of Treasury Department Circular No. 230. Accordingly, it may not be relied upon for the purpose of avoiding U.S. Federal tax penalties or to support the promotion or marketing of the transaction or matters addressed herein.

_____
Firm Name

By: _____

Its: _____
(Title)

S. Appraisal Guidelines

Appraisal Information

Appraisals are required to be submitted with the Reservation Application when the applicant is seeking acquisition credits for acquisition rehab and/or adaptive reuse LIHTC developments.

Virginia Housing will accept RD appraisals that include its requested values.

The applicant obtains appraisals independently. However, Virginia Housing reserves the right to order its own appraisal (at the applicant's expense), if it has unresolved questions or concerns about the report. The associated fee will be communicated by Virginia Housing to the applicant in writing.

Regarding 9% LIHTC applications, all questions and concerns regarding the appraisal must be resolved before preliminary rankings. As such, your application could be disqualified if Virginia Housing has to order its own appraisal.

Regarding 4% LIHTC credit applications, all questions and concerns regarding the appraisal must be resolved before the 42m letter is issued.

Appraisal Guidelines

Pursuant to Section 13 VAC 10-180-60 of the QAP, appraisals are required for all acquisition/rehab and adaptive reuse developments, where the applicant is seeking a reservation of low-income housing tax credits. Appraisals are not required if acquisition credits are not requested. Virginia Housing will accept RD appraisals that include the values discussed below.

Appraisers must have a MAI designation from The Appraisal Institute or an ASA - Accredited Senior Appraiser designation from The American Society of Appraisers. Appraisers must be in good standing with the issuing organization at the time reports are completed for Virginia Housing.

Appraisals will be obtained independently by the applicant; however, if there are unresolved concerns about feasibility, Virginia Housing will order its own appraisal.

Appraisal fees are the sole responsibility of the applicant. If Virginia Housing orders an appraisal, the fee will be communicated to the applicant in writing. Appraisals will not be ordered until Virginia Housing receives the appraisal fee, which may result in a delay of Virginia Housing approval and/or the issuance of the Section 42(m) letter.

The appraisal must be no older than six (6) months at the time of application (see "Effective Date" below). For appraisals with an effective date greater than six (6) months (but less than twelve (12) months), if there are no material changes to the development and/or market, the appraiser can provide a letter stating "No material changes since last report dated…" If there are material changes, the appraisal must be updated to include detailed discussion about those changes. No appraisal greater than 12 months old will be accepted.

Appraisals submitted to Virginia Housing in connection with a tax credit application will remain VHDA's possessions and may continue to be relied upon by Virginia Housing in determining the market feasibility of the proposed development, regardless of any unresolved concerns between the tax credit applicant and the appraiser.

If as a result of the appraisal, the owner/applicant refuses VHDA's basis for any allocation of tax credits, then the appraisal will not be approved and the tax credit application will be disqualified.

If there are inconsistencies between representations in the tax credit application and those in the appraisal such as architectural features, unit

amenities, site amenities, etc., Virginia Housing will rely only upon representations made in the tax credit application (including supporting application documentation).

Appraiser Qualifications

1. The appraiser certifies that at a minimum, the individual assigned to appraise the development has passed The Appraisal Foundation's approved state examination as well as has met its education and experience requirements, including, a course and examination on the Uniform Standards of Professional Appraisal Practice (USPAP) set forth by The Appraisal Foundation.

2. The appraiser warrants that he/she is in compliance with all applicable state and federal licensing and certification regulations in the State of Virginia.

Legal

1. Section 42 of the Internal Revenue Code requires that any relationship between the person preparing the appraisal and the applicant be disclosed prior to its engagement of services. In addition, the preparer **must not** have any interest in the development or relationship with the development's ownership entity.

2. Virginia Housing has no contractual relationship with the preparer of the appraisal. Appraisals are procured directly by the LIHTC applicant and accordingly, the applicant is the client of the appraiser. Therefore, the appraisal should be addressed directly to the client and any representations made by the appraiser should not directly or indirectly communicate that the appraiser is representing Virginia Housing or in any way acting for, at the request of, or on behalf of Virginia Housing. The appraiser, however, must identify Virginia Housing as an authorized user of the appraisal, noting that Virginia Housing may rely on the representations made therein.

3. Virginia Housing reserves the right to convey a copy of the appraisal to third parties, assigns and pertinent parties involved in the contemplated allocation of tax credits.

4. The appraiser agrees to indemnify, defend and hold Virginia Housing, its directors, officers and employees harmless from any and all claims losses, costs (including attorney's fees) and liabilities associated with the preparation of the appraisal.

Values Requested

Virginia Housing will consider the value of existing below-market rate financing and real estate tax abatement.

The appraiser will complete the Sales Comparison and Income Capitalization Approaches to value. The capitalization rate used in the Income Approach should be supported by an analysis of sales data extracted and verified from the market, investor sources and published data such as the Korpacz Real Estate Investor Survey. If the Band of Investment Method is used, the mortgage and equity rates should be adequately supported in the report.

Sub-market as discussed in these requirements is defined as the subject development's neighborhood.

1. Land "Only" Value
   The idea here is that the value of the land is the same with or without improvements/restrictions. This value should be based on similar land sales in the sub-market or the value of the "land only" of improved sales in the sub-market.

2. As-Is Building Value (Market and Restricted – not including land)
   - **Market:** as if market rents are in place; the appraiser will not consider the unique aspects of below-market financing, federal subsidies and/or low-income tax credits in this value estimate

   - **Restricted:** based on current restricted rents (not inflated); the appraiser will consider the unique aspects of below-market financing, federal subsidies and/or low-income tax credits in this value estimate If applicable, the appraiser will estimate the contribution to value of all necessary off-site improvements (e.g. water, sewer, etc.). The estimated dollar contribution for the off-site improvements should be based on the value they add to the site after their installation and not on cost.

3. Prospective Value Upon Achieving Stabilized Occupancy and/or completion of rehab (Market and Restricted – not including land)

   - **Market:** as if market rents will be in place; do not consider below-market financing, federal subsidies or low-income tax credits for this value estimate

- **Restricted:** based on estimated future restricted rents; consider below-market financing, federal subsidies and low-income tax credits for this value estimate

- **Prospective Future Market Value assuming income restrictions as set forth in the Virginia Housing Regulatory Agreement:** either (a) 20% at 50% AMI AFS, 80% at 150% AMI or (b) 40% at 60% AMI AFS, 60% at 150% AMI; the appraiser should assume the current financing will remain in place.

The Report

1. The appraisal must be submitted to Virginia Housing by the LIHTC applicant.

2. The appraisal should be in PDF/electronic format. Virginia Housing should be able to select, cut and copy text**.**

3. The appraisal shall consist of a complete self-contained Title XI narrative report. A statement must be included in the Letter of Transmittal that the appraisal is prepared in conformance to the Uniform Standards of Professional Appraisal Practice (USPAP) published by the Appraisal Foundation and Title XI of the Federal Financial Reform, Recovery and Enforcement Act of 1989 (FIRREA).

4. The primary appraiser should sign the report. All personnel assisting in the preparation and analysis of the appraisal should be identified in the report by name and title.

5. For Virginia Housing purposes, **the date of the site inspection is the Effective Date of the appraisal**. The Effective Date of the appraisal must be obviously stated on the cover page or in the Executive Summary section. A site inspection by the appraiser **must** occur within 12 months of VHDA's application deadline.

6. The appraiser will supply evidence of Errors and Omissions Insurance and a copy of State Certification in the Addenda of the report.

7. The appraiser will indicate in the Letter of Transmittal and the Summary of Important Conclusions, any special Assumptions and/or Limiting Conditions pertaining to the appraisal assignment.

8. The appraiser will review Federal Emergency Management Agency (FEMA) flood insurance rate map to determine and report the flood zone. Include this information in the summary section of the report.

9. The appraiser must make contact with the local municipal zoning office. The appraiser will verify in detail the level of conformity of the development to the applicable zoning code. In addition, the appraiser will indicate the threshold and reconstruction limits in the case of a legal non-conforming use.

10. The appraiser must make contact with the local municipal zoning office. The appraiser will verify in detail the level of conformity of the development to the applicable zoning code. In addition, the appraiser Page 4 of 7 will indicate the threshold and reconstruction limits in the case of a legal non-conforming use.If the development is located on a subdivided parcel, the appraisal must be broken down by subdivision.

11. The appraiser will present and analyze the current and projected real estate tax imposition of the development, including the most current tax and assessment data. The projection should include tax abatement, if applicable.

12. The legal description must be included in the report or as a part of the Addendum.

13. The primary appraiser or a designated representative will personally inspect the subject development and comparable properties. Every effort should be made to include the most comparable income & expense comps, as well as sales comps (i.e. located in the subject's sub-market and/or 3-5 mile radius of the subject). For example, if the subject is a "seniors only" development, seniors comps should be used. In any event, rents should be stated for the exact affordability of the subject units.

14. In addition to pertinent information (i.e. address, # units, etc.), the appraiser will include photos of each comparable development, as well as a map, which shows the comps' proximity to the subject development.

15. The narrative discussion throughout the report should address issues that relate to the fact that the development is a LIHTC development.

16. The appraiser will determine and fully explain what you believe is the Remaining Economic Life of the development, after rehab/construction completion.

17. The appraisal should focus on historical and budgeted operating statements of the subject and market data.

Sample Income & Expense Breakdown

Income	Expenses
Gross Potential Rent	Real Estate Taxes
Laundry Income	Insurance
Parking Income	Licenses and Permits
Cable Income	Gas
Miscellaneous	Electricity
	Water & Sewer
	Cable
	Trash Removal
	Pest Control
	Building Maintenance and Repairs
	Swimming Pool
	Grounds Maintenance
	(Non-resident) Management Fee
	Apartment Allowance
	Administrative Salaries
	Maintenance Salaries
	Payroll Taxes and Benefits
	Advertising
	Office Expense
	Legal & Audit
	Other

Suggested Appraisal Outline

Section 1.0 Executive Summary
Note: the Executive Summary should include a summary of all final values
Section 2.0 General Information
Section 3.0 Market Area (Physical and Environmental Forces)
Section 4.0 Site & Improvements
- Site Description
- Taxes and Assessments
- Improvements Description
- Policies and Tenant Profiles
- Functional/External Obsolescence

Section 5.0 Highest & Best Uses
Section 6.0 Valuations
- Land Value - As-Is
- Building Value - As-Is & Prospective Market Rent Values - assuming market rents.
- Building Value - As-Is & Prospective Restricted Rent Values - assuming restricted rents; also considers below-market financing, federal subsidies or low-income tax credits.

Section 7.0 Appendices

T. Zoning Certification

Zoning Certification

NOTE TO DEVELOPER: You are strongly encouraged to submit this certification to the appropriate local official **at least three weeks in advance of the application deadline** to ensure adequate time for review and approval.

General Instructions:

1. The Zoning Certification **must** be submitted on locality's letterhead or professional civil engineer's letterhead.

2. The Local Certification section **must** be completed by the appropriate local official or Civil Engineer.

3. The Engineer **must** be registered in the Commonwealth of Virginia.

4. 'Development Description' should be provided by the Owner.

5. 'Development Address should correspond to the application.

6. 'Legal Description' should correspond to the site control document in the application.

7. 'Proposed Improvements' should correspond with the application.

8. 'Other Descriptive Information' should correspond with information in the application.

9. Any change in this Certification may result in disqualification of the application.

If you have any questions, please call the Tax Credit Allocation Department at (804) 343-5518.

Zoning Certification

DATE:

TO: Virginia Housing Development Authority
601 South Belvidere Street
Richmond, Virginia 23220
Attention: JD Bondurant

RE: ZONING CERTIFICATION

Name of Development: _____

Name of Owner/Applicant: _____

Name of Seller/Current Owner: _____

The above-referenced Owner/Applicant has asked this office to complete this form letter regarding the zoning of the proposed Development (more fully described below). This certification is rendered solely for the purpose of confirming proper zoning for the site of the Development. It is understood that this letter will be used by the Virginia Housing Development Authority solely for the purpose of determining whether the Development qualifies for credits available under VHDA's Qualified Allocation Plan.

DEVELOPMENT DESCRIPTION:

Development Address:

_____
_____
_____

Legal Description:

_____
_____
_____
_____
_____
_____
_____

Proposed Improvements:

☐ New Construction: _____ # Units _____ # Buildings _____ Approx. Total Floor Area Sq. Ft.
☐ Adaptive Reuse: _____ # Units _____ # Buildings _____ Approx. Total Floor Area Sq. Ft.
☐ Rehabilitation: _____ # Units _____ # Buildings _____ Approx. Total Floor Area Sq. Ft.

Zoning Certification, cont'd

Current Zoning: _____ allowing a density of _____ units per acre, and the following other applicable conditions: _____

_____

Other Descriptive Information:

_____

_____

_____

LOCAL CERTIFICATION:

Check one of the following as appropriate:

☐ The zoning for the proposed development described above is proper for the proposed residential development. To the best of my knowledge, there are presently no zoning violations outstanding on this property. No further zoning approvals and/or special use permits are required.

☐ The development described above is an approved non-conforming use. To the best of my knowledge, there are presently no zoning violations outstanding on this property. No further zoning approvals and/or special use permits are required.

_____
Signature

_____
Printed Name

_____
Title of Local Official or Civil Engineer

_____
Phone:

_____
Date:

NOTES TO LOCALITY:

1. Return this certification to the developer for inclusion in the tax credit application package.
2. Any change in this form may result in disqualification of the application.
3. If you have any questions, please call the Tax Credit Allocation Department at (804) 343-5518.

U. Plans and Specifications Requirements

Plans and Specifications Requirements

Following are the minimum requirements for all property types (new construction, rehab and adaptive reuse).

1. A location map with the property clearly defined on the plans.
2. A site plan showing locations of all building(s) and major site elements (e.g., parking lots and location of existing utilities and water, sewer, electric, gas in the streets adjacent to the site). Contour lines and elevations are not required. If this is a combination 9%/4% development, indicate on the site plan all buildings for both 9% and 4%. Include a building-by-building unit matrix reflecting distribution of 9% and 4% units.
3. Sketch plans of main building(s) reflecting overall dimensions
4. Typical floor plan(s) showing apartment types and placement
5. Ground floor plan(s) showing common areas
6. Sketch floor plan(s) of typical dwelling unit(s)
7. Typical wall section(s) showing footing, foundation and wall and floor structure. Notes must indicate basic materials in structure, floor and exterior finish.
8. All items reflected in VHDA's Minimum Design & Construction Requirements.
9. **All 9% and 4% developments must include a unit-by-unit work write-up. This is in addition to the Physical Needs Assessment.**

Sketch plan dimensions must be sufficient to allow Virginia Housing to calculate the Gross Floor Area for the entire development and the net rentable areas for all the units in the development.

V. Relocation Plan Guidelines

Relocation Plan Requirements

The relocation plan must be kept in plain sight and available for tenants to review and should be property specific, including at a minimum:

1. The name, address and contact person for the owner and management company
2. Scope of the work to be completed, including estimated start and completion dates
3. Planned measures to minimize construction impact on occupied units
4. Projected rents and rental policies after rehab
5. Advisory services to be offered
6. Estimated determination as to Moving Cost Reimbursement
7. A unit delivery schedule

Owners must document compliance by including in each tenant's file all documentation related to relocation, including all notices and agreements referenced herein, as well as bill receipts and canceled checks. Be prepared to present this information to Virginia Housing upon request.

Relocation Assistance Guidelines

Effective immediately, these guidelines are amended to recognize changes to the Code of Virginia effective July 1, 2015 (§§ 55-222, 55-226.2, 55-248.4, 55-248.7:1, 55-248.7:2, 55-248.9:1, 55-248.15:1, 55-248.18 and 55-248.24).

In general, owners of projects which funding includes federal monies should adhere to regulations set forth under the Uniform Relocation Assistance Act of 1970 (URA), including RAD projects.

Virginia Housing guidelines focus on residents/tenants who are permanently or temporarily relocated as a direct result of the rehabilitation, demolition and/or construction of Low Income Housing Tax Credit (LIHTC) projects.

Virginia Housing guidelines must be followed to qualify for Low Income Housing Tax Credits and will be incorporated by reference in and enforced by the Contract to Enforce Representations. Furthermore, violation of these guidelines will result in a penalty against
future reservation applications.

Owner's Responsibility to Tenants

Open communication with tenants is helpful for both the owner and tenants as it helps to minimize rumors, misunderstandings and alleviate the stress of moving.

Permanent Relocation: A tenant is permanently relocated if his/her tenancy is terminated due to the rehabilitation of the unit or due to change in use. If a tenant is permanently relocated, a 120-day Notice must be delivered to the tenant, unless the lease is month-to-month and the tenant has agreed in writing to a lesser time period, in which case a 30 day notice must be issued.

120-day Notice

- Issued no less than 120 days prior to the day that the tenant must move;
- Addressed to the tenant at his/her current address;
- Informs the tenant that due to renovation they are required to move from the development, why they are required to move and states the move date.
- States the contact person for advisory services, types of services that are offered and hours as well as giving the option to make a scheduled appointment outside of normal hours if needed.
- Generally describes the relocation payment(s) for which the tenant may be eligible, the basic conditions of eligibility and the procedures for obtaining the payment (see Moving Cost Reimbursement below). Eligibility for relocation assistance shall begin on the date that acquisition negotiations are initiated or actual acquisition, whichever occurs first.
- States the contact information of management company if tenant has any questions or would like to discuss the assistance determination

Tenant Advisory Services
Advisory Services may be provided by the property management company or outside vendor. The following services must be included but is not limited to only these items.

- Provides referrals for tenants to replacement properties, and contacts said properties to request priority for persons being displaced.
- Provides tenants with written information and/or translation services in their native languages if necessary
- Provides appropriate counseling for tenants who are unable to read and understand notices
- Provides contact information for questions and access to phone or computer if needed to make contact.
- Provides transportation for tenants needing to look at other housing, especially those who are elderly or disabled
- Understand and anticipate the needs of families and the elderly and able to meet the special advisory services they may need
- Allow and make tenants aware that appointments can be scheduled outside of normal business hours if needed.

Temporary Relocation (not to exceed 30 Days): The tenant will return to the original unit or be permanently relocated to a comparable unit at the same property in 30 days or less of the initial move date.

1. The owner must pay the tenant's moving and associated costs (including utility connection costs).
2. The owner provides amenities (to include day room, refreshments, meals, T.V., etc.) to any tenant that is displaced for a partial day, during daytime hours, up to five days.
3. The owner must provide advisory services

Under this section while the tenant should receive a 30-day Notice, the tenant can agree in writing to move in less than 30 days.

30-day Notice

- Issued no less than 30 days prior to the day that the tenant has to move, unless there is a health/safety concern;
- Addressed to the tenant at his/her current address;
- States the specific date by which the tenant is required to move and the time moving services will arrive at unit
- States the responsibilities of the tenant pertaining to the move and contact information in order to request assistance with said responsibilities;
- States the address to which the tenant will be relocated;
- State, if applicable, the date on which the move-in inspection will be completed

Temporary Relocation Due to Health & Safety Concerns (not to exceed 30 Days): Where a mold condition in the dwelling unit materially affects the health or safety of any tenant or authorized occupant, the owner may require the tenant to temporarily vacate the dwelling unit in order to perform remediation, in accordance with professional standards as defined in § 55-248.4 for a period not to exceed 30 days. The landlord shall provide the tenant with either (i) a comparable dwelling unit, as selected by the landlord, at no expense or cost to

the tenant, or (ii) a hotel room, at no expense or cost to the tenant. See Code Section 55-248.12:2. Notice to the tenant can be immediate.

Temporary relocation longer than 30 Days: The owner must contact any tenant who has been or will be temporarily relocated for longer than 30 days. Owner will provide to the tenant Advisory Services and Moving Cost Reimbursement. This assistance will be in addition to assistance the tenant has already received for temporary relocation and may not be reduced by the amount of temporary relocation assistance already received.

Moving Cost Reimbursement

Owner's moving cost reimbursement to the tenant is limited to $100.00 if either of the following applies:

a. A tenant has minimal possessions and occupies a dormitory style room, or
b. A tenant's move is performed by an agency at no cost to the tenant

If neither 'a' nor 'b' above applies, and the tenant opts to move his/her belongings, the reimbursement to the tenant may be based on one or a combination of the following:

1. Based on the Federal Highway Administration's Fixed Residential Moving Cost Schedule (see Virginia) and on the number of rooms of furniture, not the number of bedrooms per unit.
2. Based on the *Tenant's Actual Reasonable Moving and Related Expenses* (including utility connection fees), which are defined as:

    A. The lower of two bids or estimates prepared by a commercial mover; or
    B. Receipted bills for labor and equipment

Hourly labor rates should not exceed the rates paid by a commercial mover to employees performing the same activity and equipment rental fees should be based on the actual rental cost of the equipment not to exceed the cost paid by a commercial mover.

Processing Tenant Moving Cost Reimbursement Claims

To support claims for relocation, the tenant must be informed they are required to provide documentation, including bills, certified prices, appraisals and other evidence of expenses. Owners must:

- Provide reasonable assistance necessary to complete and file tenants' claims for payment
- Reimburse moving costs upon receipt of billing documentation from the tenant
- Provide expedited return of security deposits or allow tenants to apply security deposits to the last month's rent
- Make advanced payments, if a tenant demonstrates the need, in order to avoid or reduce a hardship (often tenants will need these payments for security deposits)
- Promptly notify the tenant in writing of its determination, the basis for its determination and the procedures for appealing that determination, if it disapproves all or part of a payment claimed or refuses to consider the claim on its merits because of untimely filing or other grounds

- Not propose or request that a displaced tenant waive his or her rights or entitlements to relocation assistance and benefits

Owner's Responsibility to Virginia Housing

Owners are required to submit a *Relocation Plan* (the Plan) to VHDA's Tax Credit Allocation Department with the reservation application. The Plan must be kept in plain sight and available for tenants to review and should be property specific, including at a minimum:

1. The name, address and contact person for the owner and management company
2. Scope of the work to be completed, including estimated start and completion dates
3. Planned measures to minimize construction impact on occupied units
4. Projected rents and rental policies after rehab
5. Advisory services to be offered
6. Estimated determination as to Moving Cost Reimbursement

Owners must document compliance by including in each tenant's file all documentation related to relocation, including all notices and agreements referenced herein, as well as bill receipts and canceled checks. Be prepared to present this information to Virginia Housing upon request.

W. Plan of Development Certification

Plan of Development Certification

NOTE TO DEVELOPER: You are strongly encouraged to submit this certification to the appropriate local official at least three weeks in advance of the application deadline to ensure adequate time for review and approval.

General Instructions

1. This Letter must be submitted under the Locality's Letterhead
2. 'Local Certification' section must be completed by the appropriate local official
3. 'Development Description' must be provided by the Owner
4. 'Development Address' should correspond to the application
5. 'Legal Description' should correspond to the site control document in the application
6. 'Proposed Improvements' should correspond with the application
7. 'Other Descriptive Information' should correspond with information in the application

Any change in this form may result in a reduction of points under the scoring system.

If you have any questions, please call the Tax Credit Allocation Department (804) 343-5518.

Plan of Development Certification

DATE:

TO: Virginia Housing Development Authority
601 South Belvidere Street
Richmond, Virginia 23220
Attention: JD Bondurant

RE: PLAN OF DEVELOPMENT CERTIFICATION

Name of Development: _____
Name of Owner/Applicant: _____
Name of Seller/Current Owner: _____

The above-referenced Owner/Applicant has asked this office to complete this form letter regarding the site plan of the proposed Development (more fully described below). This certification is rendered solely for the purpose of confirming the status of plan of development or site plan approval of the Development. It is understood that this letter will be used by the Virginia Housing Development Authority solely for the purpose of determining whether the Development qualifies for points available under VHDA's Qualified Allocation Plan.

DEVELOPMENT DESCRIPTION:

Development Address:

_____
_____

Legal Description:

_____
_____
_____
_____

Plan of Development Number: _____

Proposed Improvements:

☐ New Construction: _____ # Units _____ # Buildings _____ Total Floor Area
☐ Adaptive Reuse: _____ # Units _____ # Buildings _____ Total Floor Area
☐ Rehabilitation: _____ # Units _____ # Buildings _____ Total Floor Area

Other Descriptive Information:

_____

_____

LOCAL CERTIFICATION:

Check one of the following as appropriate:

☐ The proposed development described above has an approved final plan of development or site plan (as applicable to the site). No further plan of development or site plan approval is required before issuance of a building permit.

☐ The proposed development is an existing development with proposed renovations and no additional plan of development approval is needed.

The above plan of development approval is in effect until: _____

_____
Signed

_____
Printed Name

_____
Title

_____
Phone

_____
Date

NOTES TO LOCALITY:

1. Return this certification to the developer for inclusion in the tax credit application package.
2. Any change in this form may result in a reduction of points under the scoring system. If you have any questions, please call the Tax Credit Allocation Department at (804) 343-5518.

X. Section 8 Waiting List Preference

PHA or Section 8 Notification Letter

Development Name: _____

Tracking #: _____

If you have any questions, please call the Tax Credit Department at (804) 343-5518.

General Instructions

1. Because of conflicting program requirements regarding waiting list procedures, this letter is not applicable to those developments that have 100% project-based Section 8 or project-based vouchers.

2. This PHA or Section 8 Notification letter must be included with the application.

3. 'Development Address' should correspond to the application.

4. 'Proposed Improvements' should correspond with the Application.

5. 'Proposed Rents' should correspond with the Application.

6. 'Other Descriptive Information' should correspond with information in the application.

NOTE: Any change to this form letter may result in a reduction of points under the scoring system.

PHA or Section 8 Notification Letter

DATE:

TO:

RE: PROPOSED AFFORDABLE HOUSING DEVELOPMENT

Name of Development: _____
Name of Owner: _____

I would like to take this opportunity to notify you of a proposed affordable housing development to be completed in your jurisdiction. We are in the process of applying for federal low-income housing tax credits from Virginia Housing. We expect to make a representation in that application that we will give leasing preference to households on the local PHA or Section 8 waiting list. Units are expected to be completed and available for occupancy beginning on _____ (date).

The following is a brief description of the proposed development:

Development Address:

_____

_____

Proposed Improvements:

☐ New Constr.: _____ # units _____ # Bldgs
☐ Adaptive Reuse: _____ # units _____ # Bldgs
☐ Rehabilitation: _____ # units _____ # Bldgs

Proposed Rents:

☐ Efficiencies: $ _____ / month
☐ 1 Bedroom Units: $ _____ / month
☐ 2 Bedroom Units: $ _____ / month
☐ 3 Bedroom Units: $ _____ / month
☐ 4 Bedroom Units: $ _____ / month

Other Descriptive Information:

_____

_____

_____

PHA or Section 8 Notification Letter

We appreciate your assistance with identifying qualified tenants.

If you have any questions about the proposed development, please call me at (___)___-____.

Please acknowledge receipt of this letter by signing below and returning it to me.

Sincerely yours,

_____
Name

_____
Title

To be completed by the Local Housing Authority or Sec 8 Administrator:

Seen and Acknowledged By: _____

Printed Name: _____

Title: _____

Phone: _____

Date: _____

Y. Project-Based Voucher Requirements

Project Based Voucher Guidelines

The following documentation must be submitted with the application in order to qualify for points associated with project based rental assistance.

1. Proof of Vouchers = a binding, awarded RFP
2. Submit with the Reservation Application a marketing plan – see Marketing Plan Instructions in the LIHTC Manual appendices

Accessible units will be confirmed by Virginia Housing during construction.

Rental subsidy documentation is required with the 8609 application.

Every accessible unit must include a roll-in shower, roll under sink and front control range, unless a waiver is granted by Virginia Housing prior to the application submission.

Z. Rural Development "High Priority" List

RANKING ORDER	PRIORITY BY AREA	PROPERTY NAME	NO. OF UNITS	RENTAL CODE/ RA UNITS	LOCATION	MANAGEMENT COMPANY	DATE OF LOAN CLOSING	AGE OF PROPERTY / YEARS	TYPE OF NEEDS *
7	Team 3	Deerfield Apartments	39	E-38	Crewe, VA	TM Associate Management Inc.	9/18/1992	28	H/S/G/DT
8	Team 5	Powhatan Apartments	48	F-44	Williamsburg, VA	TM Associate Management Inc.	11/9/2000	20	H/S/G/DT
5	Team 2	Woodstock Vilalge I	46	F-0	Woodstock, VA	TM Associate Management Inc.	10/25/1984	36	H/S/G/DT
9	Team 2	Woodstock Vilalge II	42	F-8	Woodstock, VA	TM Associate Management Inc.	4/12/1989	31	H/S/G/DT
6	Team 5	Birch Island I	48	F-32	Wakefield, VA	TM Associate Management Inc.	11/12/1999	21	H/S/G/DT
10	Team 2	Luray Village	34	E-33	Luray, VA	TM Associate Management Inc.	9/4/1998	22	H/S/G/DT
1	Team 3	Clifton Woods Apartments	66	E-0	Clifton Forge, VA	Trinkle & Associates Inc.	12/23/1977	43	H/S/G/DT
4	Team 3	Mpuntain View Apartments	54	F-0	Clifton Forge, VA	Trinkle & Associates Inc.	2/26/1981	39	H/S/G/DT
3	Team 2	Gilliam Court Apartments	72	E-70	Wise, VA	Trinkle & Associates Inc.	6/14/1979	41	H/S/G/DT
2	Team 3	Tanyard Village Apartmetns	66	E-63	Rocky Mount, VA	Trinkle & Associates Inc.	5/5/1978	42	H/S/G/DT
11	Team 3	Cedar Square Apartments	48	F-48	Stuart, VA	Community Housing Partners	3/5/1985	36	H/S/G/DT
13	Team 3	Honeytree Apartments	48	F*21	South Boston, VA	Community Housing Partners	11/19/1986	35	H/S/G/DT
12	Team 2	Grayson Manor Apartments	32	E-32	Independence, VA	Community Housing Partners	12/11/1998	23	H/S/G/DT
13									
TOTAL UNITS: 515									
25.61									
Type of Needs:									
= Health & Safety									
General Deterioration									
Rental Codes:									
= Elderly Property									
= Family Property									
As of February 2, 2021									

AA. Community Room Guidelines

Community Room Information

Points associated with this item are not allowed unless the community room is physically located within the boundaries of the development currently being considered for credits. The IRS has stated that common space (pool, meeting room, community building, laundry room, etc.) located in one phase may not be used by residents from another phase unless the area is treated as commercial space. Therefore, the cost of the common space must be subtracted from basis in order to be used by households living in another phase. Square footage requirement is calculated for all spaces not separated by doors or walls.

Community rooms may be used for program and classes with the following stipulations. Provided that the cost of the community room is not included in eligible basis, the owner may conduct (or contract with a non-profit provider to conduct) programs or classes for tenants and members of the community in the community room, so long as: (i) tenants compose at least one-third of participants, with first preference given to tenants above the one-third minimum; (ii) no program or class may be offered more than five days per week, (iii) no individual program or class may last more than eight hours per day and all programs and class sessions may not last more than ten hours per day in the aggregate; (iv) cost of attendance of the program or class must be below market rate with no profit from the operation of the class or program being generated for the owner (owner may also collect an amount for reimbursement of supplies and clean-up costs), (v) the community room must be available for use for tenants when programs and classes are not offered, subject to reasonable “quiet hours” established by owner, and (vi) any owner offering programs or classes must provide an annual certification to the Authority that it is in compliance with such requirements, with failure to comply with these requirements resulting in a 10 point penalty for three years from the date of such noncompliance for principals in the owner.

BB. Marketing Plan Requirements

Marketing Plan Instructions

While there is no standard marketing plan language to copy, every marketing plan must:

- Be customized for the property and the special needs resident base that the property is intending to serve
- State that the property will be listed at virginiahousingsearch.com
- State that units will be held vacant for 60 days during which ongoing marketing must be documented
- Include information on networking contacts with centers for independent living, disability services boards and address the efforts that will be necessary to fill a vacant unit

Held Vacant for 60 Days

Units must be held vacant for 60 days during which marketing efforts must be documented. However, if marketing to the Target Population is deemed to be conducted satisfactorily on an ongoing basis throughout the year and management can provide sufficient documentation to VHDA's Compliance Officer, management may request the ability to lease 60-point Units and 30-point Units, to a household not in the Target Population without the unit remaining vacant for the 60-day timeframe. "Ongoing basis" means contact to at least two (2) resources at least monthly in the manner noted below at any time the required number of units is not actually occupied by the Target Population.

Each time a vacancy occurs in a 60-point Unit or a 30-point Unit, if a qualified household including a person in the Target Population is not located in the 60-day timeframe, the owner or manager may submit the evidence of marketing to VHDA's Compliance Officer and request approval to rent the unit to an income-qualified household not a part of the Target Population. If the request is approved, the lease must contain a provision that the household must move to a vacant unit of comparable size in the development if a household in the Target Population applies for the unit. The move will be paid for by the owner.

If no vacant unit of comparable size is available at that time, the Target Population prospective tenant should be placed on the development's waiting list and placed in the 60-point Unit or 30-point Unit, when the first available vacant comparably sized unit becomes available to move the non-Targeted Population tenant.

NOTE: The move of the temporary/non-disabled tenant will be paid for by the owner.

CC. Proximity to Transportation Certification

Surveyor's Certification of Proximity to Transportation

General Instructions

1. This form must be included with the Application

2. This Letter must be submitted under the Surveyor's or Engineer's Corporate Letterhead

3. Any change in this form may result in a reduction of points under the scoring system.

4. If you have any questions, please call the Tax Credit Allocation Department (804) 343-5518.

Surveyor's Certification of Proximity to Transportation

DATE:

TO: Virginia Housing Development Authority
601 South Belvidere Street
Richmond, VA 23220-6500

RE: 2021 Tax Credit Reservation Request
Name of Development: _____
Name of Owner: _____

Gentlemen:

This letter is submitted to you in support of the Owner's Application for Reservation of Low Income Housing Tax Credits under Section 42 of the Internal Revenue Code of 1986, as amended.

Based upon due investigation of the site and any other matters as it deemed necessary this firm certifies that: the main street boundary entrance to the property is within:

☐ 2,640 feet or ½ mile of the nearest access point to an existing commuter rail, light rail or subway station; **or**

☐ 1,320 feet or ¼ mile of the nearest access point to an existing public bus stop.

_____
Firm Name

By: _____

Its: _____
Title

DD. Universal Design Guidelines

Universal Design Requirements

The development qualifies for Universal Design points if:

1. The Applicant agrees in its Reservation Application to provide all Universal Design Essential Elements, and the necessary number of Optional Elements;
2. Plans and specs submitted with the Reservation Application must identify all UD Essential Elements;
3. The Architect of Record will provide Final Certification prior to the issuance of Form(s) 8609.

Plans MUST clearly identify the following items in the format found on vhda.com or penalties will be assessed:

1. Overall building plans identifying the location of Universal Design dwelling units, and the means of vertical transportation (if applicable), along the accessible route(Minimum scale 1/8"=1'-0"). Include a legend and Universal Design General Notes section. Anything other than a fully handicap accessible elevator must have been presented to and approved by VHDA for this project at least two weeks prior to submission of reservation application.
2. Site plan and building plans identifying accessible pedestrian routes from all Universal Design units to accessible parking, leasing office, community room, laundry facility, mailboxes, garbage collection areas and public transportation pick up areas. Architect must identify running slope and cross slope of route, and consider any obstructions. Include required number of accessible parking spaces, a legend for the accessible route, and a Universal Design general notes section.
3. Enlarged Universal Design unit plans (Minimum scale 1/4"=1'-0") identifying clearances and all Essential Elements
4. Upon further development of the construction documents, the Architect must adhere to all Essential Elements of the VHDA Universal Design Guidelines and the necessary number of Optional Elements depending on construction type.
5. The Architect must submit the completed Universal Design (UD) checklist to VHDA prior to the requisite VHDA Pre-construction Meeting. The UD checklist must be signed and dated by the LIHTC applicant, the site engineer (if owner retained) and the Architect of Record. The Architect Certification Letter and the UD Checklist must signed by the same individual.

VIRGINIA HOUSING

2021 GUIDELINES FOR THE DEVELOPMENT OF

UNIVERSALLY DESIGNED UNITS

New Construction & Rehabilitation

Virginia Housing recognizes the need to create housing that is usable by all people while maintaining aesthetics and affordability. Universal Design has emerged as a set of design features that enhance the usability and marketability of such units. Virginia Housing provides specific incentives for developers wishing to use these features to create spaces that serve the needs of all people regardless of ability and an aging population while providing an environment that is easy to market and easy to use.

Virginia Housing views Universal Design not as a building code or accessibility standard but rather as a set of features that should integrate seamlessly into the design of a dwelling unit, providing market appeal and the possibility for residents to age-in-place. Whether applied to standard units or units designed under an accessibility code, the challenge of Universal Design is to produce as normal and appealing an outcome as possible.

Questions or comments about these guidelines can be emailed to: UniversalDesign@VirginiaHousing.com.

ESSENTIAL ELEMENTS

1. Route 3
1.1 Accessible Route
1.2 Accessible Parking
1.3 Garbage Collection
1.4 Common Spaces
1.5 Curb Cuts
1.6 Ramps

2. Movement 5
2.1 Exterior Walkways
2.2 Interior Passageways
2.3 Level Space at Entryways
2.4 Clear Space on Pull Side of All Doors
2.5 Interior Passage Doorways
2.6 Exterior Doorways and Unit Entry

3. Approach 6
3.1 Clear Floor Space
3.2 Reach Range
3.3 Operation
3.4 Door Hardware
3.5 Plumbing Fixtures

4. Kitchens 7
4.1 Clear Floor Space
4.2 Range
4.3 Refrigerator
4.4 Sink
4.5 Multiple Height Work Surfaces
4.6 Cabinet Hardware

5. Bathrooms 8
5.1 Bathroom Type
5.2 Bathing Areas
5.3 Shower Fixtures

6. Laundry 9
6.1 Side by Side, Front Loading Equipment

7. Technology 9
7.1 Thermostats

OPTIONAL ELEMENTS

1. Route 10
1.1 Weather Sheltered Entryways
1.2 Signage

2. Movement 10
2.1 Access to All Common Areas

3. Approach 10
3.1 Accessible Windows

4. Kitchens 10
4.1 Extra Floor Space
4.2 Roll-Under Range
4.3 Full Extension Drawers and Shelves
4.4 Task Lighting
4.5 Full Length Pantry Style Cabinet

5. Bathrooms 11
5.1 Extra Floor Space
5.2 Roll-Under Vanity or Sink
5.3 Tilt Mirror
5.4 Non-Glare Lighting
5.5 Solid In-Wall Blocking
5.6 Handheld Showerheads

6. Bedrooms 12
6.1 Closets

7. Audio/Visual 12
7.1 Audio/Visual Doorbell
7.2 Visual Alarm
7.3 Enhanced Site Lighting

8. Technology 12
8.1 Keyless Entry

9. Innovation 12
9.1 Innovation

Essential Elements

Each qualifying Universally Designed Unit in the LIHTC program must contain all of the essential elements listed below and comply with Virginia Housing's Minimum Design and Construction Requirements, and Minimum Cabinet Requirements. Universal Design is not a safe harbor for other required accessibility standards such as ANSI A117.1, UFAS or the Fair Housing Act. It should be used as a supplement to required accessibility standards and building codes.

1. Route

1.1 Accessible Route - An accessible route shall consist of a minimum 36" wide continuous, stable, firm and slip-resistant surface, free of obstructions and changes in level greater than a ¼" vertical. Running slopes shall not exceed 1:20 and cross slopes shall not exceed 1:50. A minimum 60"x60" passing space must be provided at reasonable intervals not to exceed 200'. Routes requiring 180° turns must have a clear width of 60" during the turn. Cross walks must be striped and may not travel directly behind parking spaces. Vertical means of transportation, other than fully handicap accessible elevators, must be presented to and approved by Virginia Housing prior to submission of the tax credit reservation application.

1.2 Accessible Parking* – Accessible parking spaces shall comply with Figure 1.2. Van accessible spaces required for public accommodation shall not count towards the number of accessible spaces required for qualifying units.

1.2.1 – Developments with off-street parking shall provide at least one accessible parking space on an accessible route for each qualifying UD unit, sufficiently dispersed to serve each qualifying UD unit.

> Exception 1:
> The total number of accessible parking spaces for UD qualifying units may be reduced to the greater of either:
> 1) 5 accessible parking spaces, or
> 2) 5% of the total number of parking spaces.
>
> Exception 2:
> Where a development receives a reduction in local zoning parking requirements from the authority having jurisdiction, a minimum 5% of off-street parking must be accessible spaces.

*Parking must comply with all applicable accessibility standards.

Figure 1.2

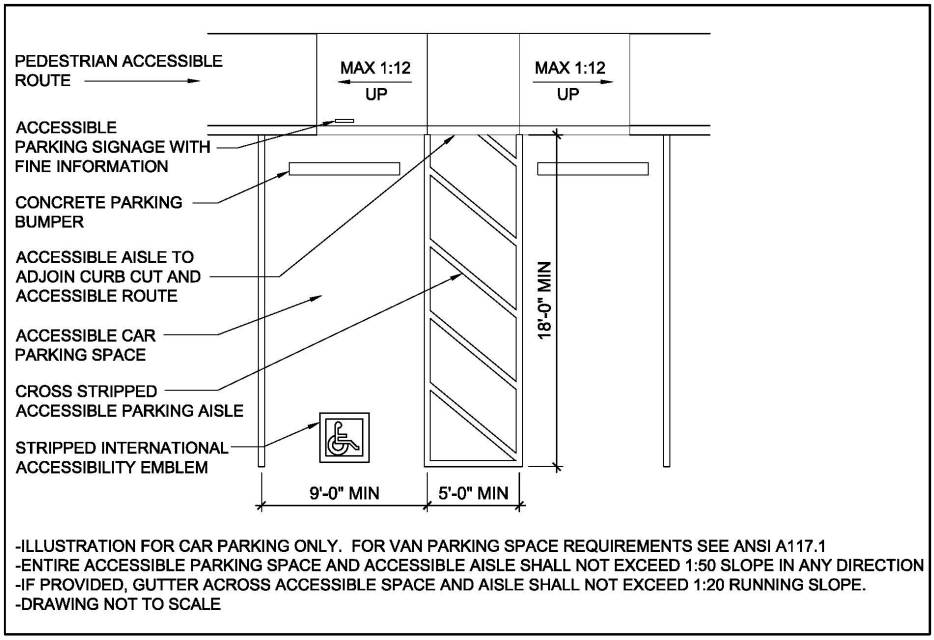

1.3 Garbage Collection - Each qualifying unit shall be located on an accessible route complying with 1.1 that leads to a resident garbage drop off area. Garbage chutes, dumpster openings, and their operating mechanisms shall be within the reach range complying with 3.2.

1.4 Common Spaces - Each qualifying unit shall be located on an accessible route complying with 1.1. which allows pedestrian access to the leasing office, community room, laundry facility, mailboxes and public transportation pick up areas if available to the facility.

> Exception:
> Alternative vehicular connectivity for impractical sites must be presented to and approved by Virginia Housing prior to submission of the tax credit reservation application. Each vehicular connected amenity must include two parking spaces compliant with Figure 1.2 in addition to the total number of spaces required by 1.2.

1.5 Curb Cuts - Shall comply with Figure 1.5 (a) or 1.5 (b). In 1.5 (a), the minimum width of a curb ramp landing shall be 60” exclusive of the ramp running slopes. In both, ramp running slopes and flared side slopes shall not exceed 1:12, however, when possible, ramp running slopes should not exceed 1:20. If a curb cut similar to that shown in Figure 1.5 (b) is provided, there shall be a minimum 36” wide clear unobstructed walk way immediately behind the curb cut with cross slopes not exceeding 1:50. Built up ramps located on the parking lot side of the curb line are not permitted.

Figure 1.5 (a)

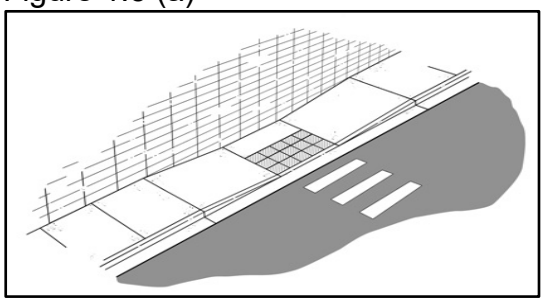

Figure 1.5 (b)

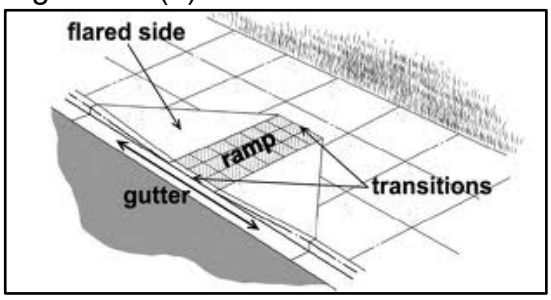

1.6 Ramps – In cases where topography and space limitations create the need for a ramp; running slopes shall not exceed 1:12. If a ramp rise is greater than 6” or if the horizontal projection is greater than 72”, handrails must be provided on both sides. Ramps shall be constructed of concrete, brick or similar cementitious/slip-resistant materials.

2. Movement -

2.1 Exterior Walkways - All existing exterior walkways on an accessible route shall be a minimum of 36” wide. All new exterior walkways shall be a minimum of 48” wide. All walkways perpendicular to parking spaces shall be 72” wide excluding curb, or 48” wide with at least 2 feet between sidewalk and back of curb or pinned concrete parking bumpers. Curb cuts shall be required to allow access to accessible areas. Walkways shall be constructed of concrete or similar cementitious material with a slip-resistant surface free of any obstructions and changes in level, with a cross slope not exceeding 1:50 and a running slope not exceeding 1:20.

2.2 Interior Passageways - Interior passageways shall have a minimum 42” clear floor width. A minimum 36” clear floor width between vertical surfaces is acceptable when traveling less than 36”.

2.3 Level Space at Entryways - Unit entryways shall have a minimum 60”X60” clear, level floor space at both the interior and exterior side of the door, and shall include the full clear width of the door. A maximum 1:50 slope is permitted at the exterior side of doors to allow water shed.

2.4 Clear Space on Pull Side of All Doors - Doors shall have a minimum 36” deep clear, level floor space that extends a minimum 18” past the latch on the pull side of the door.

2.5 Interior Passage Doorways - All interior passage doorways between rooms deeper than 24” shall have a minimum clear opening of not less than 32” with a threshold level change not exceeding 1/2” (maximum ¼” vertical rise + ¼” 1:2 slope).

2.6 Exterior Doorways and Unit Entries - All exterior and unit entry doors shall be no less than 36” wide with a threshold level change not exceeding 1/2” (maximum ¼” vertical rise + ¼” 1:2 slope).

3. Approach

3.1 Clear Floor Space - Each qualifying unit must have clear, level floor space complying with 3.1 (a) or 3.1 (b) in front of all controls.

Figure 3.1 (a)

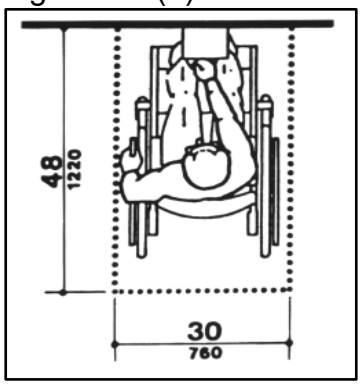

Figure 3.1 (b)

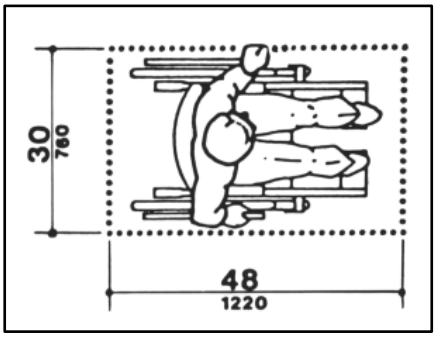

3.2 Reach Range – Operable parts shall be located in the following reach ranges.

Figure 3.2 (a)

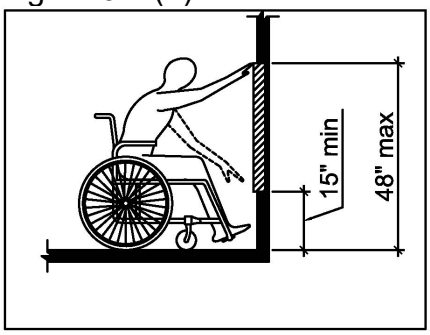

Unobstructed Forward

Figure 3.2 (b)

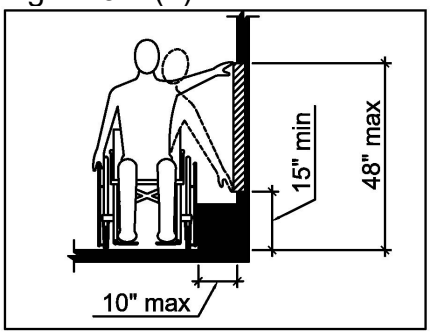

Unobstructed Side

Figure 3.2 (c)

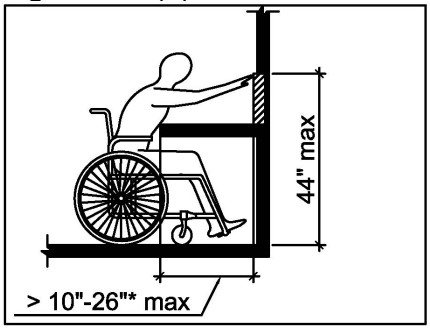

Obstructed Forward

Figure 3.2 (d)

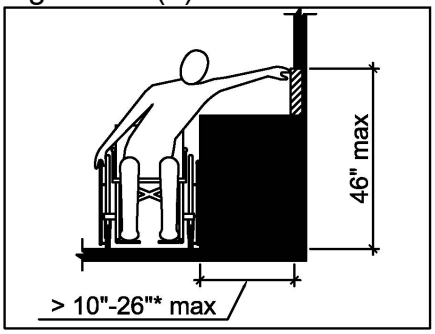

Obstructed Side

Illustrations adapted from the US Access Board

*Virginia Housing modification for countertops

Exceptions: Windows, shades/blinds, wall cabinets, closet shelving, ceiling fan cords, HVAC diffusers, smoke/CO detectors, bottoms of laundry drums, and plumbing shutoffs. Existing electric panels do not require relocation unless new feeder and/or branch wiring is provided.

3.3 Operation – Controls and operating mechanisms shall be operable with one hand and shall not require tight grasping, pinching or twisting of the wrist. The force required to activate controls shall be no greater than 5 lbs.

3.4 Door hardware – All doors shall have lever handles. All privacy locksets shall be push-button type. Thumb-turn deadbolts are acceptable.

3.5 Plumbing Fixtures – All plumbing fixtures shall be lever type.

4. Kitchens

4.1 Clear Floor Space - Each qualifying unit must have a minimum clear floor space complying with 3.1 centered on all appliances. The minimum clear floor space may be positioned for forward or parallel approach.

> Exception: Dishwashers may have either a parallel approach offset 24” maximum from appliance centerline or an immediately adjacent, permanently roll-under kitchen sink for forward approach.

4.2 Range – Range controls must comply with reach range requirements in 3.2. The location of controls for ranges and cook-tops shall not require reaching over burners. Ranges shall be self-cleaning or steam-cleaning type. Range hood fan and light controls must be switched separately and comply with reach range requirements in 3.2.

4.3 Refrigerator – The water, ice, and temperature controls must comply with reach range requirements in 3.2, or within 54” A.F.F. given a parallel approach. Refrigerators shall be side-by-side type.

> Exception: Top freezer type refrigerators may be installed in studio and efficiency apartments for new construction, adaptive reuse and renovated developments. Top freezer type refrigerators may be installed in one bedroom apartments for renovations only. Mid-height of freezer compartment shall be no more than 54” above the finished floor, and control placement for both the refrigerator and freezer shall comply with reach range requirements in 3.2.

4.4 Sink - Each qualifying unit shall have a rear drain sink with drain pipes concealed behind a removable 30” wide concealment panel or removable sink base. Concealment panel shall comply with UFAS for knee and toe clearances. If a sink base is provided, it shall be a minimum of 30” wide and easily removable using only a screwdriver. The kitchen floor finish must extend under the removable cabinet, the wall behind the cabinet must be finished, and a baseboard matching that installed in other areas of the dwelling unit shall be permanently installed behind the cabinet.

4.5 Multiple Height Work Surfaces - All qualifying units shall have multiple height work surfaces including at least one 29”–31” above the finished floor such that a person in a sitting position can work comfortably. The surface must be a minimum of 24” wide x 20” deep, and cannot be portable. Pull-out type boards are acceptable, but must carry a minimum 50 lb. load, and comply with cabinet hardware requirements in 4.6.

4.6 Cabinet Hardware – All cabinetry in a qualifying unit shall have hardware that complies with 3.3, or have touch latches, such that a person with limited dexterity may operate the cabinetry easily.

5. Bathrooms

5.1 Bathroom Type - Each qualifying unit shall have at least one bathroom complying with ANSI A117.1–2009 Type B - Option A.

5.2 Bathing Areas - Each qualifying unit having two or more full bathrooms shall have one roll-in shower with a level change no greater than ½" - (maximum ¼" vertical rise + ¼" 1:2 slope). Roll-in showers for new construction shall have clear inside dimensions of 60" minimum in width and 36" minimum in depth. Roll-in showers for renovations shall have clear inside dimensions of 60" minimum in width and 30" minimum in depth.

> Exception: A maximum of 50% of the qualifying units with two or more full bathrooms may have one step-in shower with a curb height between 2"-4" in lieu of the roll-in shower. For example, a development with 20 qualifying units, all with two full bathrooms, must have one roll-in shower in a minimum 10 of the 20 units. The design team may choose to install either a step-in shower or a roll-in shower in each of the remaining 10 units.

5.3 Shower Fixtures – All step-in and roll-in showers shall contain both a handheld shower and a fixed shower head per Figure 5.3. Handheld showers controls and diverter shall be located on the rear wall between 38" and 48" from the floor, and 27" maximum from the end wall. Handheld showers shall have a minimum 60" hose, a slide bar attachment and a locking mechanism operable with a closed fist, and should be located no more than 27" from the end wall. The fixed shower head shall be installed at the standard height and standard location. The designer has the option to either install a diverter within the hand held shower control area that directs the flow of water to either the handheld shower or the fixed shower head, or provide separate controls for both the handheld shower and the fixed shower head.

Figure 5.3

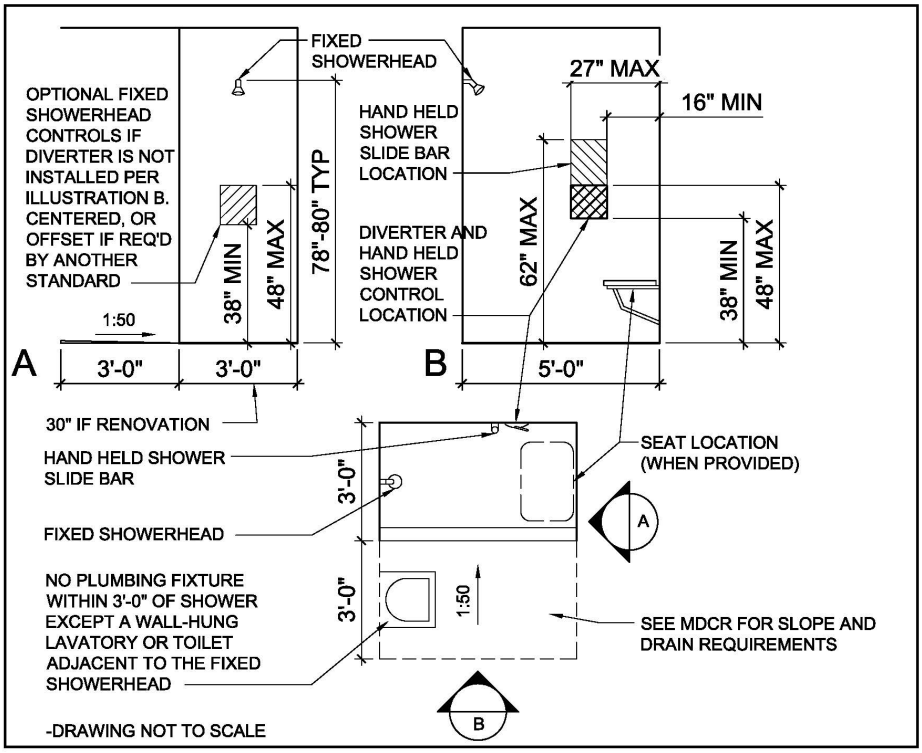

6. Laundry

6.1 Side by Side, Front Loading Equipment – Laundry equipment in qualifying units, other than tenant supplied equipment, shall be side by side, front loading type. Where hookups only are provided, laundry closets shall be sized to accommodate side by side equipment. Control placement must comply with reach range requirements in 3.2.

7. Technology

7.1 Thermostats - Each qualifying unit shall have a 'smart', programmable thermostat with voice activation capability. Voice activated control may be either integrated, or through a separate tenant-supplied mobile device or smart home hub wirelessly connected to the thermostat.

Optional Elements

New construction developments qualifying as Universally Designed in the LIHTC program must contain a minimum of ten of the optional elements listed below. Developments being renovated must contain a minimum of five of the optional elements listed below. Adaptive reuse developments must meet new construction requirements.

1. Route

1.1 Weather Sheltered Entryways – Provide covered entrances to reduce or eliminate water infiltration and provide protection for user while leaving or entering the qualifying unit.

1.2 Signage – Characters and symbols on all signage shall contrast with their background - either light characters on a dark background or dark characters on a light background. Provide Braille character translations on all interior signage. Use standard Braille conventions for location on signage. Sizing and spacing per standard Braille publications is acceptable.

2. Movement

2.1 Access to All Common Areas - From the qualifying unit via an accessible pedestrian route.

2.2 Enhanced Site Lighting - Provide one foot-candle of illumination at all exterior pedestrian routes and amenities.

3. Approach

3.1 Accessible Windows - Must comply with all four elements below. Minimum of one compliant window in each bedroom and living room.

- 3.1.1 Maximum sill height of 36” above finish floor.
- 3.1.2 Clear floor space complying with Essential 3.1.
- 3.1.3 Locks within reach range specified in Essential 3.2, and easily operable with one hand. Altered or additive hardware is not accepted.
- 3.1.4 Controls for shades/blinds within reach range specified in Essential 3.2.

4. Kitchens

4.1 Extra Floor Space - Provide a full 60”, unencumbered turning diameter within the kitchen boundary of each qualifying unit.

4.2 Roll-Under Range – Provide a drop in range in each qualifying unit affording the user the ability to roll under with unobstructed clear floor space. Knee space shall be insulated or otherwise protected on the exposed contact surfaces to prevent burns, abrasions, or electrical shock.

4.3 Full Extension Drawers and Pull-out Shelves – All base cabinetry drawers in a qualifying unit shall be full extension. In addition, a minimum of one base cabinet, 24” wide or greater, shall have high/low pull out shelving; A 24” wide pantry cabinet with at least two pull out shelves below 36” above finish floor is also acceptable.

4.4 Task Lighting – In addition to general kitchen lighting, provide task lighting at all counter surfaces. With general kitchen lighting turned off, task lights must provide a minimum of 30 foot-candles uniformly distributed across all counter surfaces.

4.5 Full Length Pantry Style Cabinet in Each Kitchen - See Figure 4.5 for one example of this feature; pantry may be part of cabinetry or it may be a conventional closet type and comply with Essentials 2.4, 2.5 and 3.2.

Figure 4.5

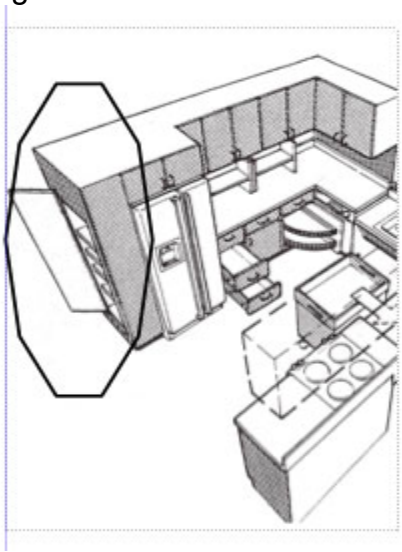

5. Bathrooms

5.1 Extra Floor Space – In each qualifying unit; provide at least one bathroom with a full 60”, unencumbered turning diameter.

5.2 Roll-Under Vanity or Sink – In each qualifying unit; provide at least one bathroom with a roll under sink or removable vanity base. If a removable vanity base is provided, it shall be a minimum of 30” wide and easily removable using only a screwdriver. The bathroom floor finish must extend under the removable cabinet, the wall behind the cabinet must be finished, and a baseboard matching that installed in other areas of the dwelling unit shall be permanently installed behind the cabinet.

5.3 Tilt Mirror – Provide an adjustable tilt/pivot style mirror in at least the Option A bathroom of each qualifying unit. Mounting height should allow mirror to be easily used in both a standing and seated position.

5.4 Non-Glare Lighting – In each qualifying unit, provide a minimum of two separate fixed light fixtures. Light sources shall be indirect and/or have frosted lenses without exposing bulbs directly to the occupant.

5.5 Solid In-Wall Blocking – Installed on walls around toilet, tub and shower for new or future grab bars and shower seat. Blocking must be suitable to carry a minimum 250 lbs. load. Molded shower surrounds shall have integral plywood backing, or, reinforcing is required fully between surround and wall blocking at grab bar and seat locations.

5.6 Handheld Showerheads – Both a fixed and handheld shower head with a minimum 60” hose shall be installed on the control end wall of all bathtubs in qualifying units.

6. Bedrooms

6.1 Closets - In each unit; provide a versatile and adjustable closet organization solution allowing for a more efficient and usable storage area. A single or double adjustable height shelf and rod will not be accepted.

7. Audio/Visual

7.1 Audio/Visual Doorbell – Provide an A/V doorbell in all qualifying units. Doorbell control location to comply with reach range requirements in Essential 3.2.

7.2 Visual Alarm – Provide electrically powered internally illuminated emergency alarms located in all habitable spaces including bathrooms, that shall flash as a visual emergency notification in conjunction with audible emergency alarms. The flashing frequency of visual alarm devices shall be less than 5 Hz. Connect visual alarms to an emergency power source, similar to audible emergency alarms.

8. Technology

8.1 Keyless Entry - Provide a deadbolt with wireless or Bluetooth technology at every qualifying unit entry door.

9. Innovation

9.1 Innovation – Virginia Housing is interested in alternative features which increase the usability of spaces for all people. Proposed alternatives must be presented to and approved by Virginia Housing prior to the mandatory pre-construction meeting.

11.3 Tilt Mirror – Provide an adjustable tilt/pivot style mirror in at least the Option A bathroom of each qualifying unit. Mounting height should allow mirror to be easily used in both a standing and seated position.

11.4 Extra, Non-Glare Lighting – In each qualifying unit, provide a minimum of two separate fixed light fixtures. Light sources shall be indirect and/or have frosted lenses without exposing bulbs directly to the occupant.

11.5 Solid In-Wall Blocking – Installed on walls around toilet, tub and shower for new or future grab bars and shower seat. Blocking must be suitable to carry a minimum 250 lbs. load. Molded shower surrounds shall have integral plywood backing, or, reinforcing is required fully between surround and wall blocking at grab bar and seat locations.

12. Bedrooms

12.1 Closets - In each unit; provide a versatile and adjustable closet organization solution allowing for a more efficient and usable storage area. A single or double adjustable height shelf and rod will not be accepted.

13. Audio/Visual

13.1 Audio/Visual Doorbell – Provide an A/V doorbell in all qualifying units. Doorbell control location to comply with reach range requirements in 3.2.

13.2 Visual Alarm – Provide electrically powered internally illuminated emergency alarms located in all habitable spaces including bathrooms shall flash as a visual emergency notification in conjunction with audible emergency alarms. The flashing frequency of visual alarm devices shall be less than 5 Hz. Connect visual alarms to an emergency power source, similar to audible emergency alarms.

13.3 Thermostats - In each qualifying unit; provide either a digital talking thermostat or a rotary style thermostat designed for the visually impaired which incorporates larger numbers and a dial with audible clicks representing degree changes.

14. Innovation

14.1 Innovation – Virginia Housing is interested in alternative features which increase the usability of spaces for all people. Proposed alternatives must be presented to and approved by Virginia Housing prior to the mandatory pre-construction meeting.

EE. Efficient Use of Resources Calculations

EFFICIENT USE OF RESOURCES
COST PER UNIT CALCULATION:

For Each Unit Type A, B, C, etc.

$$1 - \frac{\text{Subject Cost/Unit Type A}}{\text{Highest Cost/Unit Type A}} \times \text{\% of Unit Type A in Project} \times 100 \text{ Points}$$

Example: 100 units = 96,000 SF; RICHMOND MSA TDC = $8,640,000 ($9,590,000-$950,000 land & tap fees) =$90.00/SF - Family – Rehabilitation ($35,000) - Garden

	Number Units	Subject Sq. Ft.	Subject Cost/Unit	Highest Cost/Unit
1 Bedroom Units:	25	750	$67,500	$141,026
2 Bedroom Units:	45	900	$81,000	$191,392
3 Bedroom Units:	30	1,225	$110,250	$206,502

1 Bdrm Units: 1-(67,500 / 141,026) x 25% x 100 = 13.03
2 Bdrm Units: 1-(81,000 / 191,392) x 45% x 100 = 25.96
3 Bdrm Units: 1-(110,250/206,502) x 30% x 100 = 13.98

TOTAL POINTS = 52.97

EFFICIENT USE OF RESOURCES CREDIT PER UNIT CALCULATION:

For Each Unit Type 1 BDRM, 2 BDRM , etc.

$$1 - \frac{\text{Subject Credit BDRM Unit Type}}{\text{Highest Credit BDRM Unit Type}}$$

x % of BDRM Unit Type in Project

x 200 Points

Example: 100 units = 100,000 SF; RICHMOND MSA
$1,200,000 Tax Credits Requested = $12.00/SF
Family - New Construction - Garden
($1,200,000 Tax Credits Requested/100,000 SF = $12.00 Tax Credits/SF)

	Number Units	Subject Sq. Ft.	Tax Credits/ Sq. Ft.		Subject Credit/Unit	Highest Credit/Unit
1 BDRM Units:	25	697	x 12.00	=	$ 8,364	$14,333
2 BDRM Units:	45	875	x 12.00	=	$10,500	$19,110
3 BDRM Units:	30	1,440	x 12.00	=	$17,280	$22,454

1 BDRM Units: 1-(8,364 / 14,333) x 25% x 200 = 20.82
2 BDRM Units: 1-(10,500 /19,110) x 45% x 200 = 40.55
3 BDRM Units: 1-(17,280 /22,454) x 30% x 200 = 13.83

TOTAL POINTS = 75.20

EFFICIENT USE OF RESOURCES REHABILITATION PARAMETER CALCULATION:

TIDEWATER MSA
Family - 2 Bedroom Unit - Garden

Subject Contractor Costs / Total Units = $22,500

$22,500 - $15,000 = $ 7,500

$7,500 / $20,000 [$35,000-$15,000] = 0.3750

The $35,000, 2-Bedroom Parameter = $189,383

The $15,000, 2-Bedroom Parameter = $48,450

$189,383 - $48,450 = $140,933

$140,933 X 0.3750 = $52,850

$48,450 + $52,850 = $101,300

FF. Permanent Supportive Housing Certification

Virginia Housing Permanent Supportive Housing Services Certification

Permanent Supportive Housing is housing consisting of units designated for individuals or families that are homeless, at-risk of homelessness or who have multiple barriers to independent living.

Best practices are described by the U.S. Department of Health and Human Services:
http://store.samhsa.gov/shin/content/SMA10-4510/SMA10-4510-06-BuildingYourProgram-PSH.pdf

For consideration, provide **all** of the following:

1. Attach a list of developments for which you've provided permanent supportive housing services. Describe the types of services that were provided.
2. A signed copy of an MOU with a local service provider agency(ies). If no MOU exists, the service provider must sign this certification. If neither is available, provide an explanation for the lack of demonstrated partnership and describe how the property will receive referrals and from whom the residents will receive services.
3. Describe your target population(s).

4. List the types of supportive services to be offered.

5. Who will be providing supportive services?

6. What percentage of the total number of units will be marketed to and held available for tenants in need of supportive services?

_____ %

In addition, I/we certify the following:

Services

Tenant choice. Supportive housing tenants will have choices in what support services they receive (i.e., not a limited menu of services). Individual Support Plans will reflect tenant-defined needs and preferences. As supportive service tenants' needs change over time, tenants can receive more or less intensive support services.

Assertive outreach and engagement. The service team will use a variety of outreach and engagement techniques to bring tenants into helping relationships.

Case management. Case managers will serve as the bridge between tenants and the supports that help them achieve stability and long-term tenancy.

Recovery supports. Services will include at least one of the following:

- Mainstream supports, e.g., income supports from public benefits programs, healthcare from hospitals and clinics and employment help from vocational agencies
- Specialized supports, e.g., life skills training, budgeting, medication management and behavioral health treatment
- Natural supports, e.g., connections with peers, family, community and faith communities

Housing

Tenant choice. Supportive housing tenants will be able to choose where they want to live. Tenants cannot be evicted from their housing for rejecting services.

Access. Supportive housing units will be available to people who are experiencing homelessness, are precariously housed and/or who have multiple barriers to housing stability, including disabilities and substance abuse.

Quality. Supportive housing units will be similar to other units in the project.

Integration. Supportive housing tenants with disabilities will have a right to receive housing and supportive services in the most integrated settings available, including in buildings that include neighbors who do not have disabilities and where there is access to an array of community services and resources used by people with and without disabilities.

Rights of tenancy. Supportive housing tenant leases or subleases will confer full rights of tenancy, including limitations on landlords' entry into the property and the right to challenge eviction in landlord-tenant court. Tenants can remain in their homes as long as the basic requirements of tenancy are met—paying the rent, not interfering with other tenants' use of their homes, not causing property damage, etc. House rules, if any, are similar to those found in other housing.

Affordability. Supportive housing tenants should pay no more than 30% of their incomes toward rent and basic utilities.

Coordination between housing and services. Property managers and support service staff will stay in regular communication and coordinate their efforts to help prevent evictions and to ensure tenants facing eviction have access to necessary services and supports.

Delineated roles. There will be a functional separation of roles, with the housing elements (rent collection, property maintenance, enforcement of responsibilities of tenancy) carried out by different staff than those providing services (case management, mental health treatment, wraparound services).

The undersigned Owner certifies that each of the above statements is true and correct.

I/We agree that the commitment to provide supportive housing will remain in place throughout the Compliance Period (as described in the Extended Use Agreement).

_____
Date

_____
Owner/Applicant

By: _____

Its: _____
Title

_____
Service Provider

By: _____

Its: _____
Title

GG. List of Developments (Schedule A)

List of LIHTC Developments (Schedule A)

Development Name: _____

Name of Applicant: _____

_____

INSTRUCTIONS:

1. **A Schedule A is required for <u>every</u> individual that makes up the GP or Managing Member** - does not apply to principals of publicly traded corporations.
2. For each property for which an <u>uncorrected</u> 8823 has been issued, provide a detailed explanation of the nature of the non-compliance, as well as a status statement.
3. List only tax credit development experience since 2005 (i.e. for the past 15 years)
4. Use separate pages as needed, for each principal.

_____ **Controlling GP (CGP) or 'Named' Managing** _____

Principal's Name: **Member of Proposed property?*** Y or N

	Development Name/Location	Name of Ownership Entity and Phone Number	CGP or 'Named' Managing Member at the time of dev.? (Y/N)*	Total Dev. Units	Total Low Income Units	Placed in Service Date	8609(s) Issue Date	Uncorrected 8823's? (Y/N) **Explain "Y"**
1								
2								
3								
4								
5								
6								
7								
8								
9								
10								
11								
12								
13								
14								
15								
16								
17								
18								
19								
20								
21								
22								
23								
24								
25								
26								
27								
28								
29								
30								
31								
32								
33								
34								
35								
36								
37								
38								
39								
40								

* Must have the ability to bind the LIHTC entity; document with partnership/operating agreements and <u>one 8609</u> (per entity/development) for a total of 6.

1st PAGE TOTAL: 0 0 #DIV/0!

LIHTC as % of Total Units

v.01.01.21

HH. Homeownership Plan Information

Homeownership Plan Information

The plan must:

1. Be based on the premises of the Cleveland Housing Network Lease Purchase Program; and
2. Provide for the accumulation of a fund residents may access to subsidize the deficit between the purchase price and the maximum available mortgage financing available based on that household's income.

II. Developer Experience

Developer Experience

In order to qualify for these points the developer must provide documentation for one of the following:

Documentation: submit with the Reservation Application copies of (1) three previously issued 8609s; (2) corresponding partnership agreements or operating agreements; (3) corresponding org charts, which show ownership percentages; (4) statement of number of units (for previously issued 8609s)

Documentation: submit with (or prior to) the Reservation Application copies of (1) **six** previously issued 8609s; (2) corresponding partnership agreements or operating agreements; and (3) corresponding org charts, which show ownership percentages.

Documentation: submit with the Reservation Application financial statements audited, reviewed, or compiled by an independent certified public accountant. Only a balance sheet dated on or after December 31 of the year prior to the application deadline is required. Virginia Housing will accept a compilation report with or without full note disclosures. Supplementary schedules for all significant assets and liabilities may be required. Financial statements prepared in accordance with accounting principles generally accepted in the United States (U.S. GAAP) are preferred. Statements prepared in the income tax basis or cash basis must disclose that basis in the report.

Documentation: submit with the Reservation Application copies of (1) a previously issued 8609; (2) corresponding partnership agreement or operating agreement; (3) corresponding org chart, which shows ownership percentages; (4) statement of number of units (for previously issued 8609)

JJ. Final Inspection Process

Process for Final Inspections

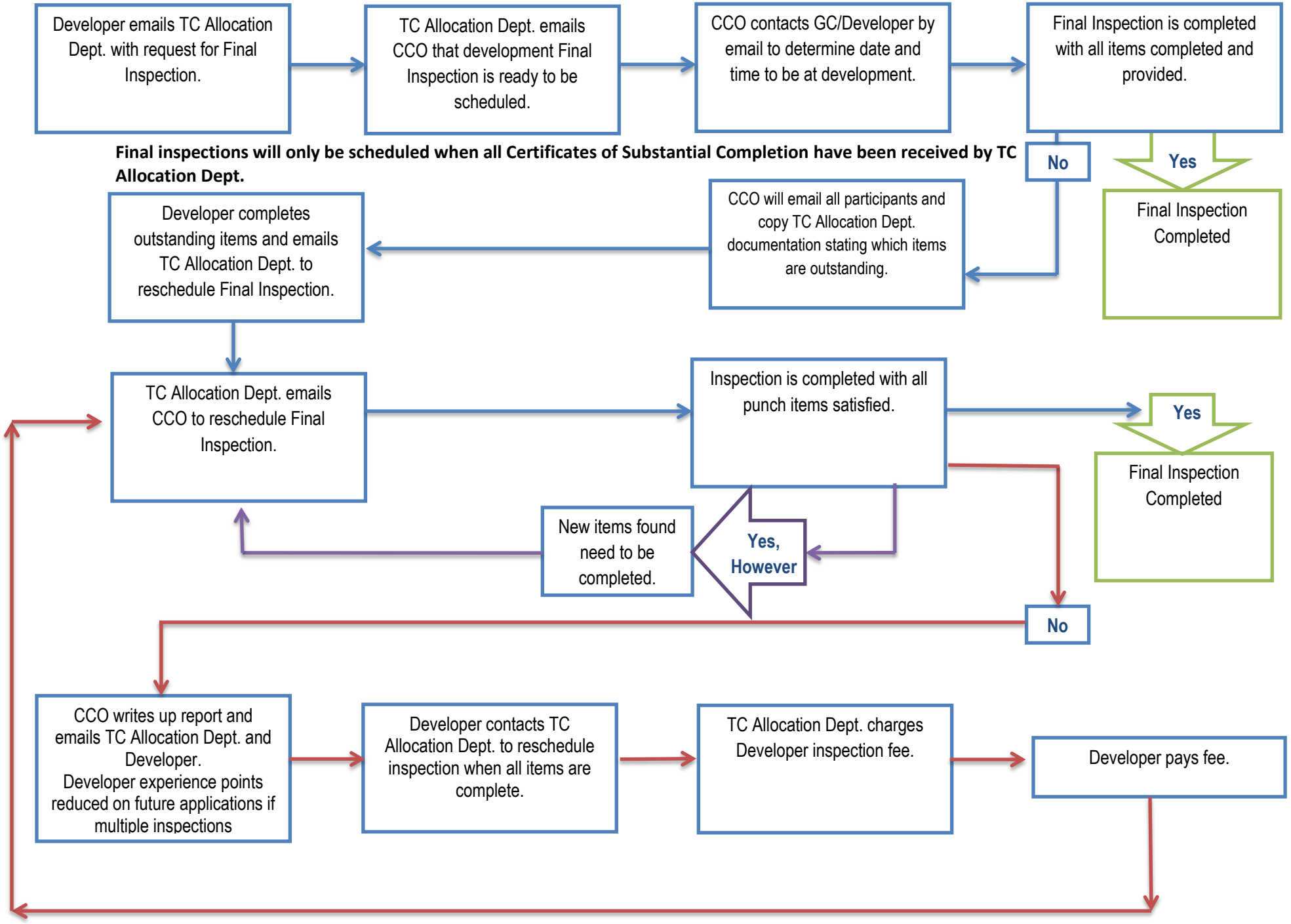

Final Inspection Process

- Developer emails assigned Virginia Housing allocation officer when they are ready for their final inspection.
    - Allocation Officer will contact Construction Control Officer(CCO) to schedule inspection
- Construction Control Officer will contact General Contractor and/or Owner to determine final inspection time and day
- If all items are completed satisfactorily then final inspection is complete.
- If items are remaining to be completed CCO will email all participants including TC department stating which items are outstanding
- Developer completes all outstanding items and emails Allocation Officer for 2nd Final inspection
    - Allocation Officer will notify CCO
    - CCO schedules 2nd Final inspection
    - If all items are completed satisfactorily then final inspection is complete.

If additional items are found needed to be completed but were not included in the initial report from the CCO the next inspection will be treated as a first inspection. **NOTE:** Final inspection will only be scheduled after all Certificates of Substantial completion have been received (this includes New Construction).

KK. Final Cost Certification

MANDATORY TAB G

Independent Auditors' Report

Owner's Name: XXXX

Project Name: XXXX

Project Number: VHDA # XX-XXX

We have audited the costs included in the accompanying Virginia Housing Development Authority (VHDA) Final Cost Certification (the "Final Cost Certification") of XXXX (the "Owner") for XXXX ("the Project") as of XXXX XX, 20XX. The Final Cost Certification is the responsibility of the Owner and the Owner's management. Our responsibility is to express an opinion on the Final Cost Certification based on our audit.

We conducted our audit in accordance with generally accepted auditing standards. Those standards require that we plan and perform the audit to obtain reasonable assurance about whether the Final Cost Certification is free of material misstatement. An audit includes examining, on a test basis, evidence supporting the amounts and disclosures in the Final Cost Certification. An audit also includes assessing the accounting principles used and significant estimates made by management, as well as evaluating the overall Final Cost Certification presentation. We believe that our audit provides a reasonable basis for our opinion.

The accompanying Final Cost Certification was prepared in conformity with the accounting practices prescribed by the Internal Revenue Service, under the accrual method of accounting, and in conformity with the format and qualified allocation plan rules set by VHDA, which is a comprehensive basis of accounting other than generally accepted accounting principles.

In our opinion the Final Cost Certification presents fairly, in all material respects, the actual costs of $XXXX and eligible basis of $XXXX of the Owner for the Project as of XXXX XX, 200X, on the basis of accounting described above.

This report is intended solely for the information and use of the Owner and the Owner's management and for filing with VHDA and should not be used for any other purpose.

We have no financial interest in the Project other than in the practice of our profession.

City, State
XXXX XX, 20XX

Schedule of Final Cost and Eligible Basis

Property Name:
Date Prepared:

	Actual Costs	Eligible Basis Costs: 30% Present Value Credit - Acquisition	Eligible Basis Costs: 30% Present Value Credit - Rehab/New Construction	Eligible Basis Costs: 70% Present Value Credit	Costs Ineligible For Basis
Contractor Cost					
Off-Site Improvements	$0	$0	$0	$0	$0
Site Work	$0	$0	$0	$0	$0
Unit Structures (New)	$0	$0	$0	$0	$0
Unit Structures (Rehab)	$0	$0	$0	$0	$0
Accessory Building (s)	$0	$0	$0	$0	$0
Asbestos Removal	$0	$0	$0	$0	$0
Demolition	$0	$0	$0	$0	$0
Commercial Space Costs	$0	$0	$0	$0	$0
Structured Parking Garage	$0	$0	$0	$0	$0
General Requirements	$0	$0	$0	$0	$0
Builder's Overhead	$0	$0	$0	$0	$0
Builder's Profit	$0	$0	$0	$0	$0
Bonding Fee	$0	$0	$0	$0	$0
Other: (Please list below)					
	$0	$0	$0	$0	$0
	$0	$0	$0	$0	$0
	$0	$0	$0	$0	$0
Contractor Cost Subtotal	***$0***	***$0***	***$0***	***$0***	***$0***
Owner Costs					
Building Permit	$0	$0	$0	$0	$0
Architect/Engineer Design Fee	$0	$0	$0	$0	$0
Architect Supervision Fee	$0	$0	$0	$0	$0
Tap Fees	$0	$0	$0	$0	$0
Soil Borings	$0	$0	$0	$0	$0
Construction Loan	$0	$0	$0	$0	$0
Construction Interest	$0	$0	$0	$0	$0
Taxes During Construction	$0	$0	$0	$0	$0
Insurance During Construction	$0	$0	$0	$0	$0
Cost Certification Fee	$0	$0	$0	$0	$0
Title and Recording	$0	$0	$0	$0	$0
Legal Fees for Closing	$0	$0	$0	$0	$0
Permanent Loan Fee	$0	$0	$0	$0	$0
Other Permanent Loan Fees	$0	$0	$0	$0	$0
Credit Enhancement	$0	$0	$0	$0	$0
Mortgage Banker	$0	$0	$0	$0	$0
Environmental Study	$0	$0	$0	$0	$0
Structural/Mechanical Study	$0	$0	$0	$0	$0
Appraisal	$0	$0	$0	$0	$0
Market Study	$0	$0	$0	$0	$0
Operating Reserve	$0	$0	$0	$0	$0
Tax Credit Fee	$0	$0	$0	$0	$0
Other: (Please list below)					
	$0	$0	$0	$0	$0
	$0	$0	$0	$0	$0
	$0	$0	$0	$0	$0
	$0	$0	$0	$0	$0
	$0	$0	$0	$0	$0
	$0	$0	$0	$0	$0
	$0	$0	$0	$0	$0
	$0	$0	$0	$0	$0
	$0	$0	$0	$0	$0
	$0	$0	$0	$0	$0
	$0	$0	$0	$0	$0
	$0	$0	$0	$0	$0
	$0	$0	$0	$0	$0
	$0	$0	$0	$0	$0
Owner Cost Subtotal	***$0***	***$0***	***$0***	***$0***	***$0***
Developer's Fees	$0	$0	$0	$0	$0
Owner's Acquisition Costs					
Land	$0	$0	$0	$0	$0
Existing Improvements	$0	$0	$0	$0	$0
Owner's Acquisition Costs Subtotal	***$0***	***$0***	***$0***	***$0***	***$0***
Total Development Costs	**$0**	**$0**	**$0**	**$0**	**$0**

Note: This schedule must be included as an attachment to the Independent Auditor's Report, which is submitted in connection with the Owner's Application For IRS Form 8609. The information on this schedule must agree to such application.

LL. Certification of Sources and Uses (8609)

CERTIFICATION OF SOURCES AND USES

Development Name: _____

Owner Name: _____

This form is completed to certify the actual cost of a property's construction and development and is to be returned to Virginia Housing with the Application for IRS Form 8609.

OWNER CERTIFICATION

The owner hereby certifies the following:

1. In connection with the Application for IRS Form 8609 for the above-named development I have obtained and attached an Independent Auditor's Report and Schedule of Final Costs. I have disclosed all costs and all uses of funding to the person or firm preparing such Report and Schedule including all kickbacks, rebates, adjustments, discounts or gifts of value made or to be made to the general contractor, architect or any corporation, trust, partnership, joint venture, or other legal or business entity in which the aforementioned entities, or any of their members, stockholders, officers, directors, beneficiaries, or partners hold any interest.
2. I have disclosed all of the development's funding sources and uses, as well as its total financing, and will disclose any future changes in funding to Virginia Housing in a timely manner.
3. I have provided Virginia Housing with the final Partnership Agreement or other ownership agreement (as amended).

_____ _____

Date Owner

By: _____

Title:_____

SYNDICATION/INVESTOR CERTIFICATION

The limited partner/investor member hereby certifies the following:

1. The Final Partnership Agreement or other ownership agreement (as amended) attached to this Certification is in full force and effect and has not been changed, altered, amended or modified.
2. There are no agreements among the limited partner/investor member, general partner/managing member and the Owner other than as set forth in the Partnership Agreement, including exhibits, and the limited partner/investor member is not obligated to make any contribution to the Owner or to the General Partner or its affiliates which is not included in the Partnership Agreement, including exhibits.
3. In connection with the Owner's Application for IRS Form 8609, we have reviewed the Owner's Certification above and the Independent Auditor's Report and Cost Certification. We believe this information to be complete and accurate.

_____ _____

Date Limited Partner/Investor Member

By: _____

Title:_____

MM. Qualified Contract Request Process

Virginia Housing

Qualified Contract Request Procedure

After the last day of the fourteenth year of the compliance period of the last building placed in service or the last year of a multiple allocation, an eligible owner of a project utilizing federal low-income housing tax credits may request a QC pursuant to IRC §42(h)(6)(E) for the acquisition of the low-income portion of the development.

> For example, if five buildings in the project began their credit periods in 1990 and one started in 1991, the 15th year for the purposes of a Request would be 2005.
>
> If the project received its first allocation of $500,000 in 1990 and a subsequent award of $25,000 in 1992, the 15th year for the purposes of a Request would be 2006.

The following procedure sets forth the terms and conditions project owners must follow in order for the Virginia Housing Development Authority (the "Authority") to administer qualified contract ("QC") requests.

All principals in the ownership of a development requesting a Qualified Contract in Virginia will be prohibited from receiving an allocation of tax credits beginning January 1, 2019.

Notice of Intent to File Request (Preliminary Application)

Between January 1 and January 31 of each year, the Authority will accept Preliminary Applications ("PAs") from owners ("Owners") of projects utilizing federal low-income housing tax credits to determine their eligibility to submit a request for a QC ("a Request.") The Owner must submit the following with the Preliminary Application:

a) first year 8609s showing Part II completed;
b) copies of all uncorrected 8823s (if any);
c) documentation regarding right of first refusal for purchase and waivers thereof (if any);
d) cash-flow statements for the previous 12 months;
e) $20,000 non-refundable administrative fee.

After receiving the PA, the Authority will schedule a mandatory meeting with the applicant. The Authority shall determine the eligibility of an Owner to submit a Request by confirming the following:

(i) the owner did not waive its right to request a QC during the allocation of the tax credits;
(ii) the tax credit property meets the basic physical compliance standards that are necessary to claim credits— an on-site physical inspection will be conducted during the preliminary review to confirm; and

(iii) the owner has secured waivers of any purchase options and rights of first refusal connected to the property.

Therefore, each PA must address each of the preceding three items. If after the review of the PA, the Authority determines the Owner is not eligible to submit a Request, the Authority will notify the Owner in writing of the reason why, and the Owner may re-apply up to one additional time in subsequent rounds. Any owner that waived its right to request a QC during the allocation of the tax credits is ineligible to submit a Request. Waivers of purchase options and rights of first refusal connected to the property may not be conditioned upon the Authority presenting a QC to the owner.

In addition to addressing basic eligibility as explained above, each Owner shall provide cash-flow statements for the previous 12 months and certify in its PA that it has all the necessary documentation to submit a Request. The PA will not bind the Owner to submit a Request and does not start the one-year period ("1YP") defined in §42(h)(6)(I). An Owner may only submit 2 preliminary applications for a property, regardless of whether they move forward with an official request or are disqualified as part of the preliminary review.

Filing a Request

The Authority will accept Requests from July 1 through July 31 of each year from Owners who submitted a PA and have been determined by the Authority to be eligible to submit a Request.

The Owner files a Request by filing with the Authority such documents and additional information as may be requested in order to comply with the IRC and these procedures and to determine the QC price in accordance with §42(h)(6)(F) (collectively the "Application.") The Executive Director may reject any Application from consideration for a QC if the Owner does not provide the proper documentation or information. The 1YP does not start until the Owner submits a complete Application with all required documents to the satisfaction of the Authority and a QC price has been agreed upon by both parties.

The Application shall include the Owner's proposed QC price. Such proposed QC price shall include an opinion of an independent certified public accountant or other assurances satisfactory to the Executive Director, setting forth the calculation of the QC price requested in the Application and certifying, among other things, that the Owner is entitled to the QC price requested. In addition, the Owner must submit the following items with the Application:

a) annual partnership federal tax returns for all 15 years of operation since the start of the credit period ("all years");
b) audited annual project financial statements for all years;
c) loan documents for all secured debt during the compliance period;
d) partnership agreement (original, current and all interim amendments);
e) title report;
f) final cost certification, including detailed sources;
g) an additional $20,000 non-refundable administrative fee; and

h) a $30,000 deposit for anticipated third-party costs.

The deposit for anticipated third-party costs may be used by the Authority to pay for:

a) an accountant to confirm the QC price requested in the application;
b) a physical needs assessment for the entire project;
c) an appraisal for the entire project;
d) a market study for the entire project; and,
e) a Phase I environmental (and a Phase II, if necessary).

If third-party costs exceed the Owner's deposit, the Authority shall make a request for an additional deposit or deposits. The Owner shall continue to make additional deposits to cover such costs in increments of $10,000 until all such costs are covered. The processing of the Request will be suspended during any time an additional deposit has been requested from the Owner until such funds are received from the Owner. If requested funds are not received within 15 days of notice to the Owner the processing of the Request will be terminated.

When the Owner submits its Request, it is authorizing the Authority to start spending the funds on deposit to pay for the items listed as 'anticipated third-party costs' (a) to (e), above. The 1YP will start on the date a valid price has been determined and accepted by both parties. A valid Request is a complete Application from an eligible Owner. The 1YP shall be suspended during any period of time during which the Authority is waiting for additional documentation from the Owner (or agents of the Owner) determined by the Authority (or professionals or agents hired by the Authority) to be necessary to determine the QC price.

The Owner may choose to cancel the Request at any time and any remaining funds in the deposit shall be returned to the Owner. There is a maximum of 2 requests per property.

Marketing of Property

Once the final request has been processed and the QC price has been established, the property will be posted for sale on VHDA's website. All documents the Authority deems relevant to the marketing and sale of the property will also be posted. All contacts on VHDA's interested parties list will be notified of the available property. Virginia Housing reserves the right to hire a broker payable from the applicant's deposit.

Virginia Housing will schedule tours of the property with potential buyers, as needed. A notice of the scheduled visit will be provided to on-site property management a minimum of 48 hours prior to the tour. In submitting the QC request, the Owner agrees to cooperate with marketing in all reasonable respects and if the property deteriorates below the level necessary to claim credits, the 1 YP will be suspended until the property is brought back in to compliance.

If Virginia Housing determines that the Property is a high priority asset, and the loss of affordable housing units would have a severe adverse effect on the local market, Virginia Housing may provide incentive to a third party purchaser or may elect to purchase the property.

Presentation of a Qualified Contract

The Authority will create a standard form contract to use when presenting the QC that includes basic real estate transaction terms and that is as close to a contingency-free contract as possible. The Owner and the proposed buyer would be free to negotiate different transaction terms prior to closing; however, failure of such negotiations does not negate the following paragraph.

Under IRC §42(h)(6)(E)(i)(II), the Authority's only obligation is to "present" to the Owner a bona fide contract signed by a prospective buyer to acquire the Owner's project for the QC price ("the Contract.") When the Authority presents the Contract to the Owner, regardless of when or if the Contract is fulfilled, the possibility of terminating the extended use period is removed for the remainder of the affordability period and the project remains bound to the provisions in, and may not terminate, the extended use agreement. Whether or not the Owner actually executes the contract and closes the transaction is a separate, legally unrelated question.

General Rules

In keeping with the clear purpose of IRC § 42, the Authority will resolve every case of doubt or interpretation in determining the QC price, both with regard to the overall process and particular projects, in favor of a lower QC price.

Disputes resulting from unreasonable, unprofessional, and/or bad faith conduct on behalf of the Owner, may result in Virginia Housing issuing a written determination that no further Qualified Contract Agreements will be presented to the Property, and VHDA's obligation to present a Qualified Contract has been met.

The Authority may add to or amend these procedures at any time. Before submitting an Application, please visit the website to obtain the most current information.

Please direct questions to Stephanie Flanders, Associate Tax Credit Allocation Officer, 804-343-5939 or email: stephanie.flanders@virginiahousing.com.

Qualified Contract Request - Preliminary Application

Please complete and return with the required documentation to:

Virginia Housing Development Authority
601 S. Belvidere Street
Richmond, VA 23220
Please Direct Questions to: Stephanie Flanders, Senior Tax Credit Allocation Officer
Phone (work): 804-343-5939
Phone 2 (work cell): 804-944-0254
Email: Stephanie.flanders@virginiahousing.com

---

1. Name and address of project:

Project Name _____
Street _____
City, State, Zip _____ , _____

2. Information on partners in the ownership entity: *(please list any additional partners on an attachment)*

Name _____
Street _____
City, State, Zip _____ , _____
Phone Number _____ ☐ General Partner ☐ Limited Partner

Name _____
Street _____
City, State, Zip _____ , _____
Phone Number _____ ☐ General Partner ☐ Limited Partner

Name _____
Street _____
City, State, Zip _____ , _____
Phone Number _____ ☐ General Partner ☐ Limited Partner

3. Project details:

a) How many buildings are in the project? _____

b) What are the dates that each building was placed in service and the first year in which it claimed credits? Please provide copies of original 8609's for each building. *(Please list information on additional buildings on an attachment.)*

Building Identification No. (BIN)	Placed In Service Date	1st Year Credits Claimed

Building Identification No. (BIN)	Placed In Service Date	1st Year Credits Claimed

c) Does the Extended Use Agreement reflect that the owner may request that Virginia Housing present a Qualified Contract? ☐ Yes ☐ No

d) Is the project mixed income (contains unrestricted units)? ☐ Yes ☐ No

e) Does the partnership agreement or other legal documentation grant any form of preference for purchasing the project? (For example, a right of first refusal granted to a nonprofit partner.) ☐ Yes ☐ No If yes, please provide the relevant documentation and information on the individual or entity holding such right.

Name _____
Address 1 _____
Address 2 _____
City, State, Zip _____ , _____
Phone Number _____

f) The owner has obtained a waiver of the above option or right of first refusal? ☐ Yes ☐ No
If yes, attach copy of waiver.
If no, explain. _____

4. Noncompliance:

a) Has the project been cited for any violations that have required an 8823 to be filed with the IRS that remain uncorrected? ☐ Yes ☐ No If yes, please state the nature and date of the violation (include copies of all uncorrected 8823s).

Nature of Violation	Violation Date

b) Does the property currently rate unsatisfactory under VHDA's Inspection Process for Evaluating Performance by Owners and Managers? ☐ Yes ☐ No
If no, explain. _____

_____

_____

c) Does the property currently meet the basic physical compliance standards that are necessary to claim credits? ☐ Yes ☐ No
If no, explain. _____

_____

_____

5. Affordability Restrictions:

a) Is the project subject to additional affordability restrictions due to loan agreements (i.e. USDA Rural Development, state/local funding, etc)? ☐ Yes ☐ No
If yes, please submit copy of loan agreement.

b) Does the property have project based rental assistance? ☐ Yes ☐ No
If yes, how many years beyond the compliance period must the project maintain affordability restrictions?

6. Property Operations:

a) Has the property operated with negative cash flow for at least the 12 months prior to filing the QC request? ☐ Yes ☐ No
If yes, provide audited financials detailing the property's negative cash-flow.
(b) If no, what necessitates the need to be released from the extended compliance period?

I certify, to the best of my knowledge and belief, that all factual information provided herein or in connection herewith is true and correct and that I will at all times indemnify and hold harmless the Authority and its assigns against all losses, costs, damages, the Authority's expenses, and liabilities of any nature directly or indirectly resulting from, arising out of, or relating to the Authority's acceptance, consideration, approval, or disapproval of this Application. I understand and agree that the one-year period during which the Authority may offer a contract will not begin until the Authority receives the final application and all supporting documentation required therein to include the following:

a) first year 8609's showing Part II completed,
b) annual partnership federal tax returns for all 15 years of operation since the start of the credit period ("all years"),
c) annual project financial statements for all years,
d) loan documents for all secured debt during the credit period,
e) partnership agreement (original, current and all interim amendments).

Owner _____

By: _____

Signature _____

Printed Name of Signatory _____

Date _____

NN. Hybrid 9% - 4% Deal Parameters

HYRBID (9%/4%) Deal Parameters

Combination developments seeking both 9% and 4% credits must adhere to the following:

- All units utilizing both 9% and 4% credits must clearly be presented as two separately financed deals including separate equity pricing that would support each respective deal in the event the other were no longer present.
- While deals are required to be on the same or a contiguous site they must be clearly identifiable as separate. This should include signage and marketing materials for both.
- While the Authority prefers separate buildings, if co-located within the same building footprint the property must identify separate entrances, stairwells and elevators. Further, the ability to create a separate leasing space must exist.
- The units financed by tax exempt bonds may not be interspersed throughout the development (no unit checker-boarding).
- The ability to generate an appraisal for both the 9% and 4% side of the development must exist.

All applicants seeking points in this category must arrange a meeting with Authority staff at the Authority's offices prior to the deadline for submission of the application in order to review both the 9% and the tax exempt bond financed portion of the project. **Any applicant failing to meet with Authority staff in advance of applying will not be allowed to compete in the current competitive round as a combination development.**

During this meeting development professionals can expect to discuss the following topics relative to the hybrid deal:

- Review requirements/timing for the 4% side and penalties if 4% doesn't come to fruition
- Who will be issuing bonds?
- Structure of both projects – separate legal parcels, separate condominiums, separate ground leases?
- Who is syndicator/investor and what role, if any, do they want in financing of deal?
- Are the attorneys and accountants versed in 9/4 combos and how to trace funds between developments?
- Construction Monitoring
- Amenities. What are the amenities and on which side are they located? Virginia Housing must approve cross-easements for use of amenities, charges for use of amenities and determination that amenities sufficient for both developments. If one side is an elderly development, does it have its own entrance and leasing office?
- T/E bond issues. (i) To be included in bond deal, must meet Virginia Housing deadlines on current bond schedule; (ii) must provide all documentation in Finance's list, e.g.

bond questionnaire; and (iii) comply with Virginia Housing standard Special Conditions for T/E bond financing – including review and approval of plans and specs and construction contract early in the process.

- Tenant Relocation issues. Are there any?
- Plans and Specifications. How far are these along for both sides of the hybrid?

If seeking Virginia Housing financing, the following may be covered:

- Locality financing issues
- Virginia Housing Loan in balance
- Retainage/Contingency
- General Contractor. Is the GC familiar with Virginia Housing Construction Contract provisions re: 10% completion assurance LOC, release of retainage at 90%completion, stored materials, etc.
- GAP loans. T/E short-term loan to meet the 50% test must be secured 100% by a letter of credit.
- MUMI. Virginia Housing statutory requirements must be met if MI or MI with MU.
- Ground Leases. Ground leases must be "subordinated" to VHDA's Deed of Trust (landlord joins in D/T to subject its interest to the lien of D/T). Exception exists for lease from a locality, with a Virginia Housing Board resolution and a lease in a form approved by Virginia Housing.
- Condo issues. Virginia Housing must approve condominium documents. Virginia Housing Borrower must have controlling voting interest in condominium association.
- Coordination of Closing. Typically need to close both loans at same time b/c purchasing the land simultaneously.

OO. Non-profit Questionnaire

Non-profit Questionnaire

Part II, 13VAC10-180-60, of the Qualified Allocation Plan (the "Plan") of the Virginia Housing Development Authority (the "Authority") for the allocation of federal low income housing tax credits ("Credits") available under §42 of the Internal Revenue Code, as amended (the "Code") establishes certain requirements for receiving credits from the non-profit pool established under the Plan and assigning points for participation of a non-profit organization in the development of qualified low-income housing.

Answers to the following questions will be used by the Authority in its evaluation of whether or not an applicant meets such requirements. Attach additional sheets as necessary to complete each question.

1. General Information

- Name of development: _____
- Name of owner/applicant: _____
- Name of non-profit entity: _____
- Address of principal place of business of non-profit entity:

  _____
- Tax exempt status: ☐ 501(c)(3) ☐ 501(c)(4) ☐ 501(a)
- Date of legal formation of non-profit (must be prior to application deadline); _____ evidenced by the following documentation:

  _____

  _____

  _____
- Date of IRS 501(c)(3) or 501(c)(4) determination letter (must be prior to application deadline and copy must be attached):

  _____
- Describe exempt purposes (must include the fostering of low-income housing in its articles of incorporation):

  _____

  _____
- How many full time, paid staff members does the non-profit and, if applicable, any other non-profit organization(s) ("related non-profit(s)") of which the non-profit is a subsidiary or to which the non-profit is otherwise related have (i.e. by shared directors, staff, etc.)?

  _____ How many part time, paid staff members? _____

  Describe the duties of all staff members:

  _____

  _____

  _____

  _____

Non-profit Questionnaire, cont'd

- Does the non-profit share staff with any other entity besides a related non-profit described above?

  ☐ Yes ☐ No If yes, explain in detail: _____

  _____

  _____

- What are the sources and manner of funding of the non-profit? (You must disclose all financial and/ or the arrangements with any individual(s) or for profit entity, including anyone or any entity related, directly, indirectly, to the Owner of the Development

  _____

  _____

  _____

  _____

- List all directors of the non-profit, their occupations, their length of service on the board, and their residential addresses:

  _____

  _____

  _____

2. Non-profit Formation

- If this is your first Non-profit Questionnaire in Virginia please explain in detail the genesis of the formation of the non-profit; otherwise please skip this question:

  _____

  _____

  _____

- Is the non-profit, or has it ever been, affiliated with or controlled by a for-profit entity or local housing authority?

  ☐ Yes ☐ No If yes, explain in detail:

  _____

  _____

  _____

- Has any for profit organization or local housing authority (including the Owner of the Development, joint venture partner, or any individual or entity directly or indirectly related to such Owner) appointed any directors to the governing board of the non-profit?

  ☐ Yes ☐ No If yes, explain: _____

  _____

  _____

- Does any for-profit organization or local housing authority have the right to make such appointments?

  ☐ Yes ☐ No If yes, explain: _____

  _____

Non-profit Questionnaire, cont'd

- Does any for profit organization or local housing authority have any other affiliation with the non-profit or have any other relationship with the non-profit in which it exercises or has the right to exercise any other type of control?

  ☐ Yes ☐ No, If yes, explain: _____

  _____

- Was the non-profit formed by any individual(s) or for profit entity for the principal purpose of being included in the non-profit Pool or receiving points for non-profit participation under the Plan?

  ☐ Yes ☐ No

- Explain any experience you are seeking to claim as a related or subsidiary non-profit.

  _____

  _____

  _____

3. Non-profit Involvement

- Is the non-profit assured of owning an interest in the Development (either directly or through a wholly owned subsidiary) throughout the Compliance Period (as defined in §42(i)(1) of the Code)?

  ☐ ☐
  §Yes No

  (i) Will the non-profit own at least 10% of the general partnership/owning entity?
  ☐ Yes ☐ No

  (ii) Will the non-profit own 100% of the general partnership interest/owning entity?
  ☐ Yes ☐ No

  If no to either 3a.i or 3a.ii above, specifically describe the non-profit's ownership interest:

  _____

  _____

- (i) Will the non-profit be the managing member or managing general partner?
  ☐ Yes ☐ No If yes, where in the partnership/operating agreement is this provision specifically referenced?

  _____

  _____

  (ii) Will the non-profit be the managing member or own more than 50% of the general partnership interest? ☐ Yes ☐ No

- Will the non-profit have the option or right of first refusal to purchase the proposed development at the end of the compliance period for a price not to exceed the outstanding debt and exit taxes of the for-profit entity?

  ☐ Yes ☐ No If yes, where in the partnership/operating agreement is this provision specifically referenced?

  _____

  _____

☐ Recordable agreement attached to the Tax Credit Application as TAB V

If no at the end of the compliance period explain how the disposition of the assets will be structured:

- Is the non-profit materially participating (regular, continuous, and substantial participation) in the construction or rehabilitation and operation or management of the proposed Development?

☐ Yes ☐ No If yes,

(i) Describe the non-profit's proposed involvement in the construction or rehabilitation of the Development:

(ii) Describe the nature and extent of the non-profit's involvement in the operation or management of the Development throughout the Extended Use Period (the entire time period of occupancy restrictions of the low-income units in the Development):

(iii) Will the non-profit invest in its overall interaction with the development more than 500 hours annually to this venture? ☐ Yes ☐ No If yes, subdivide the annual hours by activity and staff responsible and explain in detail:

- If this is a joint venture, (i.e. the non-profit is not the sole general partner/managing member), explain the nature and extent of the joint venture partner's involvement in the construction or rehabilitation and operation or management of the proposed development.

- Is a for profit entity providing development services (excluding architectural, engineering, legal, and accounting services) to the proposed development?

☐ Yes ☐ No If yes,

(i) explain the nature and extent of the consultant's involvement in the construction or rehabilitation and operation or management of the proposed development.

- Will the non-profit or the Owner (as identified in the application) pay a joint venture partner or consultant fee for providing development services? ☐ Yes ☐ No If yes, explain the amount and source of the funds for such payments.

Non-profit Questionnaire, cont'd

- Will any portion of the developer's fee which the non-profit expects to collect from its participation in the development be used to pay any consultant fee or any other fee to a third party entity orjoint venture partner? ☐ Yes ☐ No If yes, explain in detail the amount and timing of such payments.

- Will the joint venture partner or for-profit consultant be compensated (receive income) in any other manner, such as builder's profit, architectural and engineering fees, or cash flow?
  ☐ Yes ☐ No If yes, explain:

- Will any member of the board of directors, officer, or staff member of the non-profit participate in the development and/or operation of the proposed development in any for-profit capacity?
  ☐ Yes ☐ No If yes, explain:

- Disclose any business or personal (including family) relationships that any of the staff members, directors or other principals involved in the formation or operation of the non-profit have, either directly or indirectly, with any persons or entities involved or to be involved in the Development on a for-profit basis including, but not limited to the Owner of the Development, any of its for-profit general partners, employees, limited partners or any other parties directly or indirectly related to such Owner:

Non-profit Questionnaire, cont'd

4. Virginia and Community Activity

- Has the Virginia State Corporation Commission authorized the non-profit to do business in Virginia? ☐ Yes ☐ No

- Define the non-profit's geographic target area or population to be served:

_____

_____

- Does the non-profit or, if applicable, related non-profit have experience serving the community where the proposed development is located (including advocacy, organizing, development, management, or facilitation, but not limited to housing initiatives)?
  ☐ Yes ☐ No If yes, or no, explain nature, extent and duration of any service:

_____

_____

_____

- Does the non-profit's by laws or board resolutions provide a formal process for low income, program beneficiaries to advise the non-profit on design, location of sites, development and management of affordable housing? ☐ Yes ☐ No If yes, explain:

_____

_____

_____

_____

- Has the Virginia Department of Agriculture and Consumer Services (Division of Consumer Affairs) authorized the non-profit to solicit contributions/donations in the target community?

  ☐ Yes ☐ No

- Does the non-profit have demonstrated support (preferably financial) from established organizations, institutions, businesses and individuals in the target community?
  ☐ Yes ☐ No If yes, explain:

_____

_____

_____

_____

- Has the non-profit conducted any meetings with neighborhood, civic, or community groups and/or tenant associations to discuss the proposed development and solicit input? ☐ Yes ☐ No If yes, describe the general discussion points:

_____

_____

_____

- Are at least 33% of the members of the board of directors representatives of the community being served? ☐ Yes ☐ No If yes,

  (i) low-income residents of the community? ☐ Yes ☐ No

  (ii) elected representatives of low-income neighborhood organizations? ☐ Yes ☐ No

Non-profit Questionnaire, cont'd

- Are no more than 33% of the members of the board of directors representatives of the public sector (i.e. public officials or employees or those appointed to the board by public officials)? ☐ Yes ☐ No

- Does the board of directors hold regular meetings which are well attended and accessible to the target community? ☐ Yes ☐ No If yes, explain the meeting schedule:

_____

_____

- Has the non-profit received a Community Housing Development Organization (CHDO) designation, as defined by the U. S. Department of Housing and Urban Development's HOME regulations, from the state or a local participating jurisdiction? ☐ Yes ☐ No

- Has the non-profit been awarded state or local funds for the purpose of supporting overhead and operating expenses? ☐ Yes ☐ No If yes, explain in detail:

_____

_____

- Has the non-profit been formally designated by the local government as the principal community-based non-profit housing development organization for the selected target area? ☐ Yes ☐ No If yes, explain:

_____

_____

- Has the non-profit ever applied for Low Income Housing Tax Credits for a development in which it acted as a joint venture partner with a for-profit entity? ☐ Yes ☐ No If yes, note each such application including: the development name and location, the date of application, the non-profit's role and ownership status in the development, the name and principals of the joint venture partners, the name and principals of the general contractor, the name and principals of the management entity, the result of the application, and the current status of the development(s).

_____

_____

_____

_____

- Has the non-profit ever applied for Low Income Housing Tax Credits for a development in which it acted as the sole general partner/managing member? ☐ Yes ☐ No If yes, note each such development including the name and location, the date of the application, the result of the application, and the current status of the development(s).

_____

_____

_____

_____

- To the best of your knowledge, has this development, or a similar development on the same site, ever received tax credits before? ☐ Yes ☐ No

_____

- Has the non-profit completed a community needs assessment that is no more than three years old and that, at a minimum identifies all of the defined target area's housing needs and resources? ☐ Yes ☐ No If yes, explain the need identified:

_____

_____

_____

_____

Non-profit Questionnaire, cont'd

5. Attachments

Documentation of any of the above need not be submitted unless requested by VHDA

The undersigned Owner and non-profit hereby each certify that, to the best of its knowledge, all of the foregoing information is complete and accurate. Furthermore, each certifies that no attempt has been or will be made to circumvent the requirements for non-profit participation contained in the Plan or Section 42 of the Internal Revenue Code.

_____
Date

_____
Owner/Applicant

By: _____

Its: _____
Title

_____
Non-profit

_____
Date

By: _____
Board Chairman

By: _____
Executive Director

PP. 2019-2021 Minimum Design and Construction Requirements

Virginia Housing Development Authority

2021 Minimum Design and Construction Requirements

Requirements for All Developments

The following requirements were created to address issues related to the design, construction, maintenance, marketing, life cycle costs and aesthetic concerns for developments utilizing low income housing tax credits (LIHTC), and/or developments financed by the Virginia Housing Development Authority (VHDA). Submission requirements for VHDA loan applications are listed on the Architectural & Engineering Review sheet which can be found at the conclusion of the Minimum Design and Construction Requirements (MDCR). Submission requirements for the LIHTC program are contained in the tax credit application.

Drawings, specifications and scope of work are to comply with the latest applicable issue of the *Virginia Uniform Statewide Building Code (USBC)*[2], *International Building Code (IBC)*[3], other applicable Virginia and national codes, requirements of localities, prevailing design and construction practices and the *Minimum Design and Construction Requirements* of VHDA. Installation of materials, equipment, products, and building systems are to be per the manufacturers' requirements, specifications, and recommendations. All developments are to comply with accessibility requirements of *USBC*.

Requirements for New Construction

SITE WORK

1. Finished floor elevations of buildings are to be a minimum of 8 inches higher than the adjoining finished grade. When achieving an 8-inch height separation is not feasible, due to accessibility requirements or other conditions, provide an alternate solution acceptable to VHDA.

2. Areas around buildings are to be graded to have a minimum 5% slope away from foundation walls for a minimum distance of 10 feet, per *IBC*. Install yard drains, storm inlets, or drainage pipes under concrete walks to drain properly if the space between foundation walls and concrete walks is less than 10 feet. Drainage systems are to be designed to avoid water drainage over sidewalks. Provide an alternate drainage solution acceptable to VHDA:
    a. when buildings are closer than 10 feet to concrete walks
    b. when a minimum 5% slope is not feasible
    c. to avoid water draining over sidewalks
    d. at accessible entrances, when applicable

[1] The 2021 VHDA Minimum Design and Construction Requirements apply to VHDA loans with a 2021 application date, as well as developments receiving Federal Low-Income Housing Tax Credit allocations for year 2021.

[2] (USBC 2015) *Virginia Uniform Statewide Building Code* (Latest applicable edition as referenced by the *USBC*)

[3] (IBC 2015) *International Building Code* (Latest applicable edition as referenced by the *IBC*)

3. Install seamless gutters and downspouts, or an internal drainage system for all buildings. When discharging on grades steeper than 20%, or less than 1%, water from gutters and downspouts is to be piped underground to a storm sewer system, or to daylight at grades that will avoid soil erosion.

4. Paving designs are to be based upon the soil report, California Bearing Ratio (CBR) of the soil, traffic count, and loading. All drive lanes of parking lots are to be designed for dumpster trucks. Parking bays may have lighter paving than the drive lanes of parking lots.

5. Extend concrete dumpster pads at least 12 feet into the asphalt so that the load bearing wheels of trucks rest on concrete while servicing the dumpsters.
    a. Thickness of concrete is to be a minimum of 6 inches with reinforcement.
    b. Dumpsters and/or compactors accessed via an accessible route are to meet accessibility requirements.
    c. Install a privacy screen on at least three sides of all dumpster and/or compactor pads.

6. Minimum width of sidewalks is to be 3 feet. Sidewalks that are located perpendicular to parking spaces are to be a minimum of 5 feet wide excluding curb or 3 feet wide with 2 feet of space between the sidewalks and curbs. Provide gravel and sand base under walks when required by the soil report. Provide control and expansion joints.

7. Site lighting shall not be obstructed by trees.

8. Grade to avoid standing water. Provide a smoothly graded transition from disturbed to undisturbed areas. Finish grade with clean topsoil. Seed and straw, and/or landscape all bare and disturbed areas. Provide ground cover materials or sod for slopes steeper than 20%. Provide foundation plantings in the front of all buildings. Clean site and dispose of all construction debris. Grass must be established prior to project closeout.

ARCHITECTURAL

1. ROOFING
    a. Roof sheathing thickness is to be a minimum of $^{15}/_{32}$-inch-thick plywood or $^{15}/_{32}$ inch OSB. Install sheathing with clips. ZIP System roof sheathing or similar products are not accepted.
    b. Install drip edge on all sides of the roof.
    c. Install ice barrier extending from eave's edge to a point 24 inches beyond the exterior wall cladding.
    d. Roof shingles are to be a minimum 25-year, anti-fungal product, and are to be nailed (not stapled).
    e. Flat roofs to have a minimum 20-year manufacturer's warranty.

2. Provide permanent access to all flat roofs. Access to be easily reachable and located in an interior common area.

3. Install walk pads that provide access to all rooftop condenser units.

4. Provide roofs/overhangs over the front entrance doors to all units that are accessed directly from the exterior. Provide a minimum 30 inches of overhang along the front and 12 inches along each side of the door; or the door may be setback a minimum of 24 inches from the face of the exterior wall.

5. Stairs to apartment units where stair halls are not enclosed are to be protected from weather by design features, such as, setting back stairs a minimum 5 feet from the exterior wall and/or installing a roof overhang at the second floor level, projecting a minimum of 5 feet beyond the first riser.

6. Crawl spaces to be free of debris and water. Provide a minimum 6 mil vapor barrier at floor with seams overlapped 12 inches. Edges and seams to be taped.

7. Install waterproofing on exterior walls up to finished grade where finished floors are below adjoining finished grades. Provide a 10-year material/manufacturer's warranty.

8. Install weep holes in brick veneer at foundation walls, over lintels, and relief angles.
    a. Weep holes at foundation walls are to be a minimum 6 inches above finished grade.
    b. Provide mortar mesh to prevent blockage of weep holes.
    c. Provide continuous flashing at all weep holes and end dams at flashing terminations.

9. At masonry and precast window sills, and caps for masonry veneer walls that do not terminate directly under roofs, provide a positive slope resulting in a minimum ¾ inch differential over the length of the sil/cap.

10. All wood framing in contact with concrete or masonry is to be of treated wood.

11. Provide sill sealer for sill plates at all exterior walls.

12. All brick veneer or sidings, such as vinyl, aluminum, wood and fiber cement board, are to have a solid backing of plywood, OSB, gypsum, or similar material. Siding and brick are to be installed over an independent drainage plane, such as Tyvek® or equal. Fasten siding to framing with nails penetrating a minimum ¾ of an inch into studs. Install pre-manufactured mounting blocks for all penetrations in siding such as electrical, plumbing, HVAC, etc.

    EXCEPTION: Exterior wall sheathing systems with integrated drainage planes may be used when observation reports are provided by the manufacturer and the following conditions are met:

    1) Pre-installation
        a) General Contractor to hold pre-installation meeting with architect and manufacturer prior to installation. Manufacturer's observation reports to include documentation of meeting.
        b) Manufacturers' flashing details including windows, doors, joints and penetrations must be maintained on site.
        c) Store materials to meet manufacturer's requirements.
    2) Installation
        a) The integral drainage plane must be preserved. Use manufacturer's approved products including tape, tape gun and roller.
        b) When weather conditions warrant, follow manufacturer's requirements for inclement weather installation and storage of materials.
        c) Manufacturer's representative to review the final installation to confirm all requirements are met **prior** to installation of exterior cladding. Manufacturer's observation reports documenting installation acceptance is required and must be maintained on site.

13. All panel type siding to be installed over vertical furring to allow adequate drainage and ventilation, or provide siding product with integrated vented rain screen.

14. The use of foil faced sheathing is prohibited.

15. The bottom of all siding and window sills are to be a minimum of 6 inches above the finished grade or mulch beds.

16. Exterior wooden trim, brickmolding, sills, fascia, rake boards, and columns, are to be clad with vinyl, vinyl coated aluminum, or similar materials. Use materials designed for cladding with a minimum thickness of 0.019 inch and provide a stiffening crimp for trim and fascia boards are more than 8 inches wide. VHDA recommends the use of low maintenance composite/manufactured materials instead of wood for exterior use.

17. Powder coat or galvanize all exterior steel products, or provide an exterior steel paint that can achieve a minimum 10-year material warranty. Prepare surfaces per warranty requirements. Prime and paint steel prior to placement in concrete.

18. Use vinyl, aluminum, or steel for exterior railings, handrails, guard rails, posts and pickets instead of wood.

19. Windows and sliding glass doors:
    a. Provide minimum ½ inch insulated glass.
    b. Provide minimum 10-year warranties for material and breakage of seal.
    c. Provide thermal break for aluminum frames.
    d. Install and flash per manufacturer's specifications.
    e. Provide back dam flashing at sill.
    f. Before installing windows; perform initial installation with the Construction Control Officer.

20. All exterior doors, except sliding glass doors, are to be of insulated fiberglass or insulated metal. Exterior wooden door jambs and molding require composite material, such as FrameSaver® or equal, at their lowest points.

21. Install hard surface flooring at the interior of all entrance doors, except for doors entered through carpeted interior hallways. Hard surface area is to be approximately 3 foot by 4 foot using flooring materials such as VCT, sheet vinyl, hardwood, or tile.

22. Resilient flooring such as, but not limited to, sheet vinyl and VCT is to be installed over minimum nominal ¼ inch underlayment grade plywood, or similar underlayment material. Ceramic tile or similar flooring is to be installed over minimum nominal ¼ inch cementitious board or similar underlayment material. Flooring may be installed over concrete provided concrete is finished smooth and uniform. When installed over Gypcrete, or a similar material, apply manufacturer approved sealer.

23. Carpets are to have the minimum number of seams. Seams are not to be located in heavily trafficked areas. T-seams are not acceptable except in closets.

24. All interior doors are to be side hinged. Bifold, pocket, or sliding doors are not acceptable. Install or undercut doors a minimum of ¾ inch clear to prevent dragging and to provide ventilation. Paint bottom top and all other sides of doors.

25. All base and base moldings in a unit are to be solid wood and are to match in design and finish.
    EXCEPTION: Ceramic or stone baseboard is acceptable at matching flooring.

26. All windows are to have blinds, shutters, or other similar products, and sliding glass doors are to have vertical blinds.

27. Provide a minimum of 1 ½ bathrooms (one full bathroom and one half bathroom) in all two bedroom units and a minimum of 2 full bathrooms in all three or more bedroom units.

28. Concealed solid dimensional wood blocking (2x material) is to be provided for all handrails, grab bars and wall mounted cabinets and accessories.

29. Tub and shower surrounds built of ceramic tile, marble, or similar materials are to be installed over minimum ½ inch cementitious board.

30. Provide a pass-through opening with counter space when kitchen and dining/living areas are separated by a wall.

31. Kitchen cabinets and bathroom vanities are to comply with *Virginia Housing Development Authority's Minimum Cabinet Requirements*:
    a. All cabinets are to be factory/manufacturer assembled.
    b. All exposed portions of cabinetry must have factory applied finish.
    c. Kitchen cabinets and bathroom vanities are to abut the side walls or provide a minimum spacing of 12 inches between wall and cabinets. Wall cabinets are to abut the ceiling/soffits or provide minimum of 12 inches between cabinet and ceiling/soffits.
    d. Kitchen wall cabinets are to be screwed to blocking with a minimum of four washer head cabinet screws; two in each upper and lower nailing strip for each wall cabinet.
    e. Plastic laminate countertops are to be post formed or have back splashes that are factory attached to the countertop and sealed.
    f. A side splash is to be installed where countertops abut walls.
    g. Holes in cabinet backs for plumbing are to be drilled and completely covered by escutcheon plates.

32. Install a cleanable surface, such as plastic laminate, metal, or ceramic tile on the sidewall next to the cooking range when it is located directly adjacent to a wall. Materials such as plastic laminate or metal are to be installed with adhesive.

33. APPLIANCES
    a. Provide 30-inch-wide range in all units except studio/efficiency apartments and one bedroom elderly apartments, which may have a minimum 20-inch-wide range. Provide maximum 24-inch-wide range hood for all 20-inch-wide ranges.
    b. Provide a range hood or combination range hood-microwave over all cooking ranges.
    c. Provide a 24-inch-wide dishwasher in all units, except for studio/efficiency apartments, which may have 18-inch-wide dishwashers.
    d. All refrigerators are to be frost free. The refrigerators are to have separate doors for freezer and refrigerator compartments. Minimum sizes of refrigerators are to be 12 cubic feet for studio/efficiency apartments, 14 cubic feet for 1 and 2 bedroom apartments, and 16 cubic feet for 3 and 4 bedroom apartments.

e. Provide laundry equipment, or connections for full-size side-by-side or full-size stack type washers and dryers, in all units. When provided, laundry equipment and connections shall be installed in a closet with doors in a location other than a bedroom. Otherwise, provide onsite laundry facilities.
   Exception: Studio and one bedroom apartments may utilize a bedroom closet for laundry equipment provided equipment does not impede on tenant storage, an exhaust fan with humidistat is installed in the closet, and a jumper duct is provided to communicate with return air location. (See "Plumbing" section for washing machine pan requirements.)
f. All kitchen appliances in an apartment unit are to match in color.

34. Age restricted housing serving residents 55 years or older:
    a. Provide a handrail on at least one side of common corridors.
    b. Provide an accessible elevator for buildings with two or more stories.

35. Where a permanent dehumidification system is not provided for all units, provide space for a future dehumidifier in a stud cavity within the apartment living space. Utilize concealed power and plumbing drain (e.g. mechanical closet). Identify location in drawings and coordinate with plumbing and electrical.

MECHANICAL

1. Provide Heating, Ventilation, and Air Conditioning (HVAC) equipment with R-410A refrigerant in all dwelling units. All apartments are to have ducted HVAC systems except as noted in #3 below. Size of HVAC equipment, ducts and diffusers are to be designed per heat gain/loss calculations.

2. For all ducted HVAC systems including ducted mini-splits and self-contained packaged systems (similar to Magic-Pak or First Co):
    a. Air supply diffusers are to be located near windows in living rooms, dens and bedrooms.
       EXCEPTION: The mechanical engineer may locate diffusers at alternate locations with VHDA's prior approval based on supporting calculations.
    b. Provide HVAC diffusers for kitchens and all full baths.
    c. Provide premanufactured air filters.
    d. Seal air duct penetrations in unheated spaces.
    e. Refrigerant and condensate lines are to be concealed within walls. Seal all penetrations
    f. Provide a separate ducted return for each floor of townhouse units.
    g. Heat pump to include auxiliary heat.

3. Ductless Heat Pumps (mini-splits) may be used in efficiencies, 1 bedroom units or elderly housing developments.
    a. All mini-splits are to discharge condensate to grade through a pipe concealed within the exterior wall system.
    b. Provide separate mini-split wall mounted unit for each bedroom, den or living room.
    c. Provide separate wired wall mounted thermostat for each mini-split wall mounted unit.
    d. Provide a heater with a thermostat or timer controlled heat lamp for all full baths.

4. All exhaust ducts are to discharge to the exterior of the building, and terminate into vent caps. Vent caps to be of a quality that will minimize repair and replacement.

5. Do not install condenser units in front of windows.

6. Electric baseboard heating and electric forced air heating shall not be used as the primary heating method.

PLUMBING

1. Clothes washing machines or connections for clothes washing machines are to have a pan, with a drain, connected to the sewer system per applicable plumbing code.

2. The bottoms of bath tubs are to have slip resistant/textured finish.

3. All tubs/showers and shower diverters are to have internal shut-off-valves or external shut-off-valves with access panels.

4. Depress entire bathroom floor and build up as needed to account for accessibility and drainage requirements when designing for roll-in showers. Bathrooms which include a roll-in shower, are to have ceramic or similar tile flooring. Roll-in showers are to be either:
    a. Ceramic or similar tile floor with water proofing membrane extending a minimum 8” up walls. A minimum of 3'-0" of the bathroom floor is to slope back towards the shower drain at 2%, with a zero height transition between the bathroom floor and the shower floor, **- or -**
    b. Premanufactured with a trench drain located immediately adjacent to, and the full length of, the shower. The bathroom floor shall have a 2% slope towards the trench drain.

5. When installing wall-hung sinks, provide concealed arm type carriers.

6. All wet plumbing pipe to be solid wall construction (Cellular core pipe not permitted).

7. All floor drains and indirect waste receptors to receive trap primer or code approved drain trap seal device.

8. Seal around all plumbing penetrations in floors, walls and ceilings.

9. When installing electric water heaters provide the following minimum sizes:
    a. Studio/1BR units 30 gallon
    b. 2BR units 40 gallon
    c. 3BR units 50 gallon

10. Provide hub drain in mechanical closet to accept overflow pan and condensate lines.

ELECTRICAL

1. Provide fluorescent light fixtures or LED light fixtures in all public common areas such as offices, multipurpose rooms, laundry rooms, hallways, and stairs.

2. Kitchens are to have a minimum of one light fixture 4 feet long with either LED or two 32 watt fluorescent bulbs, or lighting fixture(s) that provide a minimum illumination of 30 foot candles distributed across all countertops.

3. Pre-wire cable TV and internet outlets for all bedrooms, living rooms, family rooms, and dens. Provide a minimum of one landline telephone outlet in each apartment. Provide interface for incoming service at one central location per building. All wiring for the interior and exterior of the building is to be concealed within the walls.

4. Exterior fixtures are to be LED, fluorescent, metal halide, high or low pressure sodium, or mercury vapor. Tenant controlled exterior lighting is exempt. Provide exterior lighting to illuminate all parking areas, dumpster pads, building entrances and mailboxes with a minimum of one-foot candle of illumination. Provide illumination so that building numbers and apartment numbers are legible at night.

5. Seal around all electrical penetrations.

6. Provide tenant controlled light fixture at all patios and balconies.

7. Where a permanent dehumidification system is not provided for all units, provide an outlet for a future dehumidifier. Identify outlet location in drawings and coordinate with architectural. Locate outlet such that when dehumidifier is installed, power cord will not be visible from a habitable space.

Requirements for Rehabilitation

All **additions** and **adaptive reuse** are to comply with the VHDA Minimum Design and Construction Requirements (*MDCR)* for *New Construction*. **Adaptive reuse** may also be required to comply with the *MDCR for Rehabilitation* where VHDA deems applicable.

All rental offices, public areas, and associated parking and routes are to meet the latest USBC accessibility requirements for new construction. Developments that have accessible units are to provide accessible routes, accessible parking, and accessible common areas.

Identify any hazardous materials/conditions such as asbestos, lead paint, radon, recalled drywall, mold on site and/or in buildings and contaminated soils. Address or abate all hazardous materials per applicable regulations. Submit abatement certification to the Virginia Housing Development Authority if requested.

SITE WORK

1. Identify areas that require grading to drain water away from buildings and areas where adjoining grades are higher than finished floor of buildings:
    a. Provide a minimum distance of 6 inches between finished grade or mulch beds, and the bottom of siding and window sills.
    b. Provide a minimum of 5% slope away from foundation walls, for a minimum distance of 10 feet.
    c. Provide alternate solutions acceptable to VHDA when required grades, slopes, or other site conditions make the above requirements infeasible.

2. Provide seamless gutters and downspouts for all buildings, or an internal drainage system. When discharging on grades steeper than 20%, or less than 1%, water from gutters and downspouts is to be piped underground to a storm sewer system, or to daylight at grades that will avoid soil erosion. Avoid water drainage over sidewalks.

3. Extend concrete dumpster pads at least 12 feet into the asphalt so that the load bearing wheels of trucks rest on concrete while servicing the dumpsters.
    a. Thickness of concrete is to be a minimum of 6 inches with reinforcement.
    b. Dumpsters and/or compactors accessed via an accessible route are to meet accessibility requirements.
    c. Install a privacy screen on at least three sides of all dumpster and/or compactor pads.

4. Concrete that is cracked, crumbling, spalling, heaving or settling, or may be a safety issue is to be repaired or replaced. Provide a solution acceptable to VHDA if any of these conditions exist. Sidewalks at new locations to comply with new construction guidelines.

5. Asphalt that has cracking, alligatoring, or a deteriorating sub-base is to be repaired or replaced. Provide a solution acceptable to VHDA if any of these conditions exist. Paving at new locations to comply with new construction guidelines.

6. Remove all dead bushes, trees, tree-stumps, and their above-ground roots. Remove all portions of tree branches that overhang roofs and all branches that come within 10 feet of roofs.

7. Grade to avoid standing water. Provide a smoothly graded transition from disturbed to undisturbed areas. All areas which have dead grass are to be tilled. Seed and straw, and/or landscape all bare and disturbed areas. Finish grade with clean topsoil. Provide ground cover materials or sod for slopes steeper than 20%. Provide foundation plantings in the front of all buildings. Clean site and dispose of all construction debris. Grass must be established prior to project closeout.

ARCHITECTURAL

1. Install waterproofing up to finished grades for all perimeter walls of finished and unfinished spaces where evidence of water, moisture, or mildew is present. Waterproofing may be installed on the exterior or interior sides of the wall. The waterproofing system is to have a minimum 10-year manufacturer's warranty.

2. All debris and wood are to be removed from crawl spaces.
    a. Install sump pump or drain tile discharging to daylight for any area accumulating water.
    b. Install a minimum 6 mil vapor barrier at floor with seams overlapped 12 inches. Edges and seams to be taped. Provide adequate crawl space ventilation.

3. Remove all abandoned and non-operable equipment, devices and accessories. VHDA may approve abandoned material that is secured, sealed and concealed.

4. Structural deficiencies are to be identified and corrected. If requested by VHDA, corrective measures to be designed, inspected, and certified by a structural engineer.

5. Install minimum of R-19 insulation in unconditioned crawl spaces and basements and R-38 insulation in attics.

6. When replacing drywall at an exterior wall or replacing exterior sheathing, provide wall insulation at affected areas per the latest adopted edition of the International Energy Conservation Code.

7. Roof inspection reports are required for all roofs more than 5 years old. Report to include age and remaining life of roofs and areas that need repairs. Replace all roofs with a remaining life of less than 5 years. Repair or replace all roofs with damage or leaks.

8. When replacing pitched roofs:
    a. Repair or replace all damaged sheathing, rafters, and/or trusses.
    b. Replace all $^{3}/_{8}$ inch sheathing with a minimum of $^{15}/_{32}$-inch plywood or $^{15}/_{32}$ inch OSB. Install sheathing with clips. ZIP System roof sheathing or similar products are not accepted.
    c. Replace all existing attic vents and pipe collars. Replace rusted or damaged flashing. Replace all existing sealant.
    d. Roof shingles are to be a minimum 25 year, anti-fungal product, and are to be nailed (not stapled). Do not install new shingles over existing shingles. Replace existing ridge vents.
    e. Install drip edge on all sides of the roof.

f. Install ice barrier extending from eave's edge to a point 24 inches beyond the exterior wall cladding.
g. Provide roof ventilation per the latest USBC for new construction.

9. When replacing flat roofs:
    a. Remove and dispose of existing roofing and above deck insulation, damaged vents and other items not in good condition.
    b. Provide a minimum R-25 continuous insulation above the roof deck or provide a minimum R-38 insulation in the attic space.
    c. New roofing is to have a minimum 20-year manufacturer's warranty.
    d. Provide roof ventilation per the latest USBC for new construction.

10. Install walk pads that provide access to all rooftop condenser units.

11. If equipment is installed on a roof, provide easily reachable access from an interior common area.

12. Stairs to apartment units where stair halls are not enclosed are to be protected from weather by design features. Install an awning, a roof overhang at the second floor level, or a roof at the stair hall entrance. Provide a minimum overhang of 5 feet from first riser. All buildings in a development are to have similar design features. Historic buildings may be exempt.

13. Exterior wooden trim, brickmold, sills, fascia, rake boards, and columns are to be clad with vinyl, vinyl coated aluminum, or similar materials. Use materials designed for cladding with a minimum thickness of 0.019 inch and provide a stiffening crimp for trim and fascia boards are more than 8 inches wide. Replace all damaged wood prior to cladding. VHDA recommends the use of composite/manufactured materials instead of wood for exterior use. Exceptions may be considered for historic buildings.

14. When repainting existing or installing new exterior steel products; powder coat, galvanize or provide an exterior steel paint that can achieve a minimum 10-year material warranty. Prepare surfaces per warranty requirements. Prime and paint steel prior to placement in concrete.

15. When replacing exterior railings, handrails, guard rails, posts and pickets use vinyl, aluminum, or steel instead of wood.

16. When replacing siding:
    a. New siding is to have solid backing of plywood, OSB, gypsum, or similar material. Siding is to be installed over an independent drainage plane, such as Tyvek® or equal.
        EXCEPTION: Exterior wall sheathing systems with integrated drainage planes may be used when observation reports are provided by the manufacturer and the following conditions are met:
        1. Pre-installation
            a. General Contractor to hold pre-installation meeting with architect and manufacturer prior to installation. Manufacturer's observation reports to include documentation of meeting.
            b. Manufacturers' flashing details including windows, doors, joints and penetrations must be maintained on site.
            c. Store materials to meet manufacturer's requirements.

2. Installation
    a. The integral drainage plane must be preserved. Use manufacturer's approved products including tape, tape gun and roller.
    b. When weather conditions warrant, follow manufacturer's requirements for inclement weather installation and storage of materials.
    c. Manufacturer's representative to review the final installation to confirm all requirements are met **prior** to installation of exterior cladding. Manufacturer's observation reports documenting installation acceptance is required and must be maintained on site.

b. Do not install new siding over materials such as vinyl siding, Thermo-ply®, or other flexible materials.
c. Material such as T1-11, wood siding, or hardboard lap-siding may be used as backing for new siding, provided it is in good condition.
d. Repair, replace, and re-nail all sections of damaged siding or sheathing to provide a uniform and flat surface.
e. Fasten siding to framing with nails penetrating a minimum ¾ of an inch into studs.
f. Install mounting blocks for all penetrations in siding such as electrical, plumbing, HVAC, and ductwork etc.

17. All new panel type siding to be installed over vertical furring to allow adequate drainage and ventilation, or provide siding product with integrated vented rain screen.

18. The use of foil faced sheathing is prohibited.

19. Repair masonry walls having cracks and/or settlement. Replace damaged brick and point-up deteriorated mortar to match existing. Replace rowlocks for window sills that do not have a slope to drain water away from building. Prime and paint all metal lintels which are corroded, or not already painted. Remove abandoned items from brick and power wash/clean exterior of buildings.

20. Replace all damaged windows.

21. Replace single glazed windows with insulated glass.
    a. When window replacement is not permitted in historic buildings, repair or replace existing windows and install triple track operable storm sashes, with screens, over existing single glazed windows.
    b. When conditions make storm sashes not feasible, provide an alternative solution acceptable to VHDA.

22. When replacing windows and/or sliding glass doors:
    a. Provide minimum ½ inch thick insulated glass.
    b. Provide minimum 10 year warranties for material and breakage of seal.
    c. Provide thermal break for aluminum frames.
    d. Provide new construction windows when replacing siding.
    e. Provide back dam flashing at sill.
    f. Install and flash per manufacturer's specifications. Perform initial replacement with Construction Control Officer.

23. All windows are to have blinds, shutters, or other similar products, and sliding glass doors are to have vertical blinds. Replace all blinds that are damaged and/or do not match in color.

24. Repair or replace all damaged or dented doors, jambs and hardware.
    a. When replacing exterior doors, except sliding glass doors, replacement doors are to be insulated fiberglass or insulated metal. Wooden door jambs and molding require composite material, such as FrameSaver® or equal, at their lowest points.
    b. Solid core wood doors may be used where entrances are located in interior conditioned corridors.

25. All entry doors to apartment units, except entry doors located in conditioned corridors, are to have weather stripping and threshold to provide a tight seal around the door and to minimize heat loss/gain due to air infiltration.

26. Replace all damaged Gypcrete, or similar material, floor sheathing and floor joists.

27. Install an area approximately 3 feet by 4 feet using materials such as VCT, sheet vinyl, hardwood flooring, or tile at the interior of all entrance doors, except for doors entered through carpeted interior hallways.

28. Repair or replace all damaged or mismatched flooring. On a room by room basis, all flooring must match in color and design.

29. Resilient flooring such as, but not limited to, sheet vinyl and VCT is to be installed over minimum nominal ¼ inch underlayment grade plywood, or similar underlayment material. Ceramic tile or similar flooring is to be installed over minimum nominal ¼ inch cementitious board or similar underlayment material. Flooring may be installed over concrete provided concrete is finished smooth and uniform. When installed over Gypcrete, or a similar material, apply manufacturer approved sealer.

30. Carpets are to have the minimum number of seams. Seams are not to be located in heavy traffic areas. T-seams are not acceptable except in closets. Remove shoe molding/quarter-round molding before installing carpet.

31. Provide a pass-through opening with counter space when kitchen and dining/living areas are separated by a wall.

32. Interior finishes: doors, moldings, paint, and drywall.
    a. Replace all interior bifold, pocket, or sliding doors with side hinged doors.
    b. Repair or replace all damaged doors and trim.
    c. All doors, door trim, and door hardware in a unit are to match in design and finish.
    d. Install or undercut doors a minimum of 3/4 inch clear to prevent dragging and to provide ventilation.
    e. Paint bottoms, tops, and all other sides of new doors.
    f. All base and base moldings in a unit are to be solid wood and are to match in design and finish.
        EXCEPTION: Ceramic or stone baseboard is acceptable at matching flooring.
    g. Repair flaws in drywall such as, but not limited to, holes, failing tape joints, cracks and nail pops. Replace all drywall that has mold, mildew, or signs of moisture.
        1. When drywall replacement is required, match adjacent type and thickness.

2. Nail pops and settling drywall must be re-screwed to framing.
3. Repairs, including previous repairs, are to match the adjacent surface and the unit's intended finish.

33. Repair damaged or compromised draft stopping and/or fire stopping

34. Concealed solid dimensional wood blocking (2x material) is to be provided for all new handrails, grab bars and wall mounted cabinets and accessories.
    EXCEPTION: Toggle bolts may be used at wall mounted accessories.

35. Replacement or repairs of tub and shower surrounds built of ceramic tile, marble, or similar materials are to be installed over minimum ½ inch cementitious board.

36. When replacing kitchen cabinets and/or bathroom vanities all new cabinets are to comply with *Virginia Housing Development Authority's Minimum Cabinet Requirements*.
    a. Cabinets and/or vanities that are not being replaced are to be approved by VHDA.
    b. All cabinets are to be factory/manufacturer assembled.
    c. All exposed portions of cabinetry must have factory applied finish.
    d. Kitchen cabinets and bathroom vanities are to abut the side walls or provide a minimum spacing of 12 inches between wall and cabinets. Wall cabinets are to abut the ceiling/soffits or provide minimum of 12 inches between cabinet and ceiling/soffits.
    e. Kitchen wall cabinets are to be screwed to blocking with a minimum of four washer head cabinet screws; two in each upper and lower nailing strip for each wall cabinet.
    f. Plastic laminate countertops are to be post formed or have back splashes that are factory attached to the countertop and sealed.
    g. A side splash is to be installed where countertops abut walls.
    h. Install a cleanable surface, such as plastic laminate, metal, or ceramic tile to the side wall next to the cooking range when it is located directly adjacent to a wall.
    i. Remove and replace all drywall that has mold. Repair or replace all damaged drywall.
    j. Holes in cabinet backs for plumbing are to be drilled, and completely covered by escutcheon plates.

37. APPLIANCES
    a. Replace all damaged and or dented appliances and all appliances which are more than 8 years old. All kitchen appliances in an apartment unit are to match in color.
    b. Provide 30-inch-wide range in all units except studio/efficiency apartments and one bedroom elderly apartments, which may have a minimum 20-inch-wide range. Provide range hoods or combination range hood-microwaves over the cooking ranges. Provide maximum 24-inch-wide range hood for all 20-inch-wide ranges.
    c. Dishwashers are required in all units. Provide 24-inch-wide dishwashers except for studio/efficiency apartments, which may have 18-inch-wide dishwashers.
    d. All refrigerators are to be frost free. The refrigerators are to have separate doors for freezer and refrigerator compartments. Minimum sizes of refrigerators are to be 12 cubic feet for studio/efficiency apartments, 14 cubic feet for 1 and 2 bedroom apartments, and 16 cubic feet for 3 and 4 bedroom apartments.
    e. When present, laundry equipment and connections shall be installed in a closet with doors. New locations may not be in a bedroom.

Exception: Studio and one bedroom apartments may utilize a bedroom closet for laundry equipment provided equipment does not impede on tenant storage, an exhaust fan with humidistat is installed in the closet, and a jumper duct is provided to communicate with return air location.

38. Provide a handrail on at least one side of common corridors for age restricted housing serving residents 55 years or older.

MECHANICAL

1. All units are to have a Heating, Ventilation, and Air Conditioning (HVAC) system. Sizes of HVAC equipment, ducts and diffusers are to be designed per heat gain/loss calculations. All apartments are to have ducted HVAC systems except as noted in #3 below.

2. When installing a new HVAC system including, but not limited to, traditional split systems, ducted mini-split or self-contained "packaged systems" (similar to Magic-Pak and First Co):
    a. Replace both air-handlers and condensers at the same time.
    b. R-410A refrigerant is required in all new HVAC equipment.
    c. Verify if refrigerant lines are appropriate for new HVAC unit size and type. Lines not being replaced are to comply with all of the requirements of the manufacturer for using existing lines. Submit a letter from the manufacturer that states the use of existing lines will not reduce performance and/or warranty of the heat pumps or other air conditioning systems.
    d. Condensate and refrigerant lines not located in the mechanical closet are to be concealed within the wall, ceiling, or floor systems.
    e. Fire-caulk all penetrations in fire partitions and ceilings.
    f. Seal air duct penetrations in unheated spaces.
    g. When adding and/or replacing ductwork, air supply diffusers are to be located near windows in living rooms, dens, and bedrooms.
        EXCEPTION: The mechanical engineer may locate diffusers at alternate locations with VHDA's prior approval based on supporting calculations.
    h. Provide a separate ducted return for each floor of townhouse units.
    i. Provide premanufactured air filters.
    j. Replace all diffusers and thermostats.
    k. Air supply diffusers are to be located in living rooms, dens, bedrooms, kitchens, and full baths.
    l. Replace condenser pads that are damaged. Pads are to be concrete, solid vinyl, or similar materials. Level all condenser units.
    m. Heat pumps to include auxiliary heat.

3. Ductless Heat Pumps (mini-splits) may be used in efficiencies, 1 bedrooms or elderly housing development.
    a. All mini-splits are to discharge condensate to grade through a pipe concealed within the exterior wall system.
    b. Provide separate mini-split wall mounted unit for each bedroom, den or living room.
    c. Provide separate wired wall mounted thermostat for each mini-split wall mounted unit.
    d. Provide a heater with a thermostat or timer controlled heat lamp for all full baths.

4. All exhaust ducts are to discharge to the exterior of the building, and terminate into vent caps. Vent caps to be of a quality that will minimize repair and replacement.

5. Clean existing HVAC ducts and plenums. Verify duct sizes and air flows (cubic feet per minute at supply diffusers) are appropriate for HVAC system. Replace all supply and return vent covers and diffusers. Seal all duct penetrations in unheated spaces. All existing ductwork located in crawl spaces, attics, or any unconditioned space, is to be properly insulated. Clean, service, and repair all HVAC units not being replaced.

6. All bathroom fans are to be in good working condition, cleaned, and ducted out to the exterior. Install fans in all bathrooms, including those with windows.

7. Electric baseboard heating and electric forced air heating shall not be used as the primary heating method.

PLUMBING

1. Identify all water supply material types. Water supply is to have adequate pressure.
    a. Replace all interior, exterior, and underground PB (Polybutylene) pipes such as "Quest" and "Big Blue" with current code accepted materials.
    b. Replace all galvanized pipes with CPVC, copper, plastic or other approved materials.

2. Video and jet all sewer lines connecting buildings with the public sewer. Identify pipe material types and repair or replace all corroded, damaged, or settled underground sewer lines. Provide report of video findings to VHDA and include repair/replacement costs.

3. Identify all sanitary pipe material types and replace all galvanized lines and traps with PVC.

4. All wet plumbing pipe to be solid wall construction (Cellular core pipe not permitted).

5. All floor drains and indirect waste receptors to receive trap primer or code approved drain trap seal device.

6. When replacing water heaters, installations are to comply with latest adopted edition of the *International Plumbing Code for New Construction*. Refer to Code for pan and drain specifications.

7. Clothes washing machines or connections for clothes washing machines are to have an IntelliFlow A2C-WB automatic washing machine water shutoff valve with leak sensor, or approved equal, or have a pan with a drain connected to the sewer system per applicable plumbing code.

8. When installing new wall-hung sinks, provide concealed arm type carrier.

9. All new tubs/showers and shower diverters are to have internal shut-off-valves or external shut-off-valves with access panels.

10. Bathtubs, showers, and surrounds which will not be replaced, are to be refinished or repaired. Remove mold and stains, clean, and re-caulk all tubs, showers, and surrounds. The bottoms of all new bathtubs and showers are to have slip resistant/textured finish.

11. Bathrooms which include a **new** roll-in shower are to have ceramic or similar tile flooring. Roll-in showers are to be either:

a. Ceramic or similar tile floor with water proofing membrane extending a minimum 8” up walls. A minimum of 3'-0" of the bathroom floor is to slope back towards the shower drain at 2%, with a zero height transition between the bathroom floor and the shower floor, - **or –**
b. Premanufactured with a secondary floor drain located outside of the shower. The bathroom floor shall have a 2% slope towards the secondary floor drain. Provide silicone joint between bathroom and shower floor.

12. Seal around existing accessible and all new plumbing penetrations in floors, walls and ceilings.

ELECTRICAL

1. Size electric panels and service per load calculations.

2. Electrical panels with fuses are to be replaced with circuit breakers.

3. Use appropriate connectors for connecting aluminum wiring to electrical outlet and switches.

4. All switches, outlets and cover plates that are painted, damaged or worn, are to be replaced and are to match in color and design.

5. Provide ground fault outlets near vanities in all bathrooms.

6. All wiring for the interior and exterior of the building is to be concealed within the walls, ceiling or floor systems. Cable TV, internet and/or telephone wiring exposed within individual apartment units may be accepted when fastened to the edges of baseboards and/or door casings and not crossing any portion of floors, doorways or openings. Exposed electrical service to the building is to be in conduit and run vertically to the meter without horizontal runs.

7. When replacing kitchen cabinets and counter tops, electrical outlets for countertop, ranges, refrigerators, dishwashers, and other appliances are to comply with the latest applicable requirements of the *National Electric Code for New Construction*.

8. Provide fluorescent light fixtures or LED light fixtures in all public common areas such as offices, multipurpose rooms, laundry rooms, hallways, and stairs.

9. Kitchens are to have a minimum of one light fixture 4 feet long with either LED or two 32 watt fluorescent bulbs, or lighting fixture(s) that provide a minimum illumination of 30 foot candles distributed across all countertops.

10. Provide a minimum of one electric smoke detector with battery backup for garden units and a minimum of one electric smoke detector with battery backup for each floor for townhouses.

11. Exterior fixtures are to be LED, fluorescent, metal halide, high or low pressure sodium, or mercury vapor. Tenant controlled exterior lighting is exempt. Provide exterior lighting to illuminate all parking areas, dumpster pads, building entrances and mailboxes with a minimum of one-foot candle of illumination. Provide illumination so that building numbers and apartment numbers are legible at night.

12. Seal around existing accessible and all new electrical penetrations.

Virginia Housing Development Authority

Architectural & Engineering Review

VHDA LOAN APPLICATION SUBMISSION REQUIREMENTS:

- The submission requirements listed below are for properties applying for VHDA financing.
- If the property is receiving both VHDA financing and Tax Credits, the scope of work should include amenity items committed to in the Tax Credit Application.
- If the property is applying for Tax Credits only, follow **Tax Credit submission requirements specified in the Tax Credit Application.**
- All drawings submitted shall be printed full size and to scale. Reduced size and digital drawings are not acceptable**.**

New Construction Requirements

1. Civil drawings **
2. Architectural drawings *
3. Structural drawings **
4. Mechanical drawings **
5. Plumbing drawings (including Fire Suppression) **
6. Electrical drawings (including Fire Alarm) **
7. Three-part specification book encompassing all work
8. Site lighting and photometric drawings **
9. Landscape drawings
10. Geotechnical Report
11. Phase I Environmental Site Assessment
12. Narrative scope of work with itemized cost estimate

Rehabilitation Requirements

1. Civil drawings **
2. Architectural drawings *
3. Structural drawings**
4. Mechanical drawings **
5. Plumbing drawings (including Fire Suppression) **
6. Electrical drawings (including Fire Alarm) **
7. Three-part specification book, or outline specification, encompassing all work
8. Site lighting and photometric drawings **
9. Landscape drawings
10. Unit by unit condition survey not older than 6 months prior to submission
11. Termite Report
12. Water Intrusion Report (to be provided by architect or 3rd Party for all below grade spaces)
13. Phase I Environmental Site Assessment
14. Narrative scope of work with itemized cost estimate

15. Structural, Geotechnical, Roof Condition and Sewer Line reports when applicable
16. For detailed descriptions of submission requirements refer to www.VHDA.com → Business Resources →Multifamily Program, →Multifamily Loan Applications, Guides and Forms

*All drawings to be a minimum 85% complete and prepared by a Virginia licensed architect
**All drawings to be a minimum 85% complete and prepared by a Virginia licensed Professional Engineer

VHDA Architectural and Engineering Review Process

Prior to Loan Commitment

VHDA will review the submission and provide comments. The Architectural & Engineering (A&E) review comments will be captured in a template that will be shared with the borrower. The architect of record and engineers of record will amend the template with their responses. An item will remain "open" until a satisfactory response and corresponding revision to the plans has been received. VHDA will accept full size slip sheet changes rather than full set resubmissions during this process only at the discretion of the A/E plan reviewer. All revisions must be "clouded and tagged", and the appropriate revision date must be added to the sheet's title block. **The review process must be completed (no "open" items) before a commitment will be issued**.

Prior to Loan Rate Lock

Once all open items have been closed, the borrower will deliver to VHDA a full size "contract" set of plans and specifications which includes all revisions and addenda made during the VHDA review process. Prior revision clouds and tags must be removed. This set shall include an index identifying all sheets in the set by sheet number and sheet title. In addition, the index must identify all individual revision dates for each sheet. Each sheet's revision dates must be identified on its title block and match the index of drawings. Add the VHDA Signature Block (found on the VHDA website) to the set's cover sheet, the index sheet, and the seal section of the specification book. The signature block must be signed by the owner, architect of record, and general contractor. The borrower is responsible for providing a copy of the signed "contract" set and specifications to all parties of the VHDA construction contract.

All revisions that have occurred after VHDA's last review must be presented to VHDA in narrative form for approval prior to the submission of the contract set. Once approved, revisions should be "clouded and tagged" and included in the signed contract set.

Each sheet of the "contract" set must include the architect of record's seal and signature, except drawings completed by consulting engineers which must be signed and sealed by the applicable engineer. **The signed "contract" set of plans and specifications must be reviewed by VHDA before a loan will be rate locked. Furthermore, rate lock will not be allowed until final site plan approval has been obtained.**

Submittals Required after Completion of Construction

Architect to review and approve the general contractor's as-built drawings and create an as-built package to include all revisions and changes to drawings and specifications. Architect to submit the as-built package in PDF format on a CD at the completion of construction and before the loan may convert to permanent financing.

Solid vertical lines in margins identify revisions to VHDA's Minimum Design and Construction Requirements from VHDA's 2019 Minimum Design and Construction Requirements. Format changes such as reorganization, number changes, and phrasing are not identified.

QQ. Existing Conditions Questionnaire

VHDA Multifamily Development
Existing Condition Questionnaire/On-Site Analysis

Project: _____ Date of Visit: _____

Project Type(s): High/Mid-rise Garden Style Townhouse Scattered Site Other: _____

Structure(s): Concrete Steel Masonry Wood Other: _____

Number of Buildings: _____ Age of Property: _____

Number of Units: _____ First Occupancy: _____

Unit Addresses and Unit Types Observed: _____

_____

Site

Parking

Age: _____ Alligatoring: Y N Potholes: Y N

Drainage: G P Overall Condition: _____

Lighting

Min. 1fc at parking? Y N Min. 1fc at sidewalks? Y N Min. 1fc at mailboxes? Y N

Min. 1fc at dumpsters? Y N Overall Condition: _____

Grading

Negative Drainage Observed: Y N Location: _____

Water Infiltrating Buildings: Y N Location: _____

Landscaping

Grass Dead Patches: Y N Overall Condition: _____

Foundation Plantings: Y N Overall Condition: _____

Dead landscaping/stumps: Y N Notes: _____

Trash

Dumpster OR Compactor OR Individual Tenant Cans

Enclosure: Y N Condition: _____

Apron: Y N Condition: _____

Retaining Walls

Exist on site: Y N Condition: _____

Additional needed: Y N Notes: _____

Sidewalks

Cracks/Spalling: Y N Trip Hazards: Y N

Overall Condition: _____

Accessibility

Accessible Route Provided From HC Parking to Units: Y N

Notes: _____

_____

Accessible Route Provided From Units to Common Areas: Y N

Notes: _____

_____

Systems

HVAC

Type: _____

Avg. Age of Equipment: _____ Overall Condition: _____

Exhaust Fans Discharge to Exterior: Y N

Additional Notes: _____

VHDA TO FILL IN GREY AREAS

VHDA Multifamily Development
Existing Condition Questionnaire/On-Site Analysis

Plumbing

Interior

Supply Type: Copper CPVC PEX Polybutylene Other _____

Overall Condition: _____

Waste Type: Cast Iron PVC Galvanized Other _____

Overall Condition: _____

Exterior

Supply Type: Copper CPVC PEX Polybutylene Other _____

Overall Condition: _____

Waste Type: Cast Iron PVC Galvanized Other _____

Water Heater Type:_____ Avg. Age: _____ Condition: _____

Bathtub Type: Fiberglass Cast Iron Other Condition: _____

Surround Type: Fiberglass Ceramic Other Condition: _____

Toilet: GPF: _____ Avg. Age: _____ Condition: _____

Electrical

Service Size Per Building: _____ Unit Panel Size: _____

Feeder Type: Copper OR Alum. Branch Wire Type: Copper OR Alum.

Outlet age: _____ Outlets Grounded: Y N

Outlet Overall Condition: _____

Exposed Wiring: Y N Locations: _____

Phones **Cable TV**

Outlet Locations: _____ Outlet Locations: _____

Kitchen Lights: 1x4 Fluorescent OR Other _____

Laundry: In-unit OR Central

Type: Side by Side Stacked Combo Other _____

Age: _____ Condition: _____

How is Overflow Addressed: Pan with Drain Moisture Sensor Other _____

Appliances

Ref. Avg. Age: _____ Range Type: _____ Avg. Age: _____ Range Hood Avg. Age: _____

Dishwasher: Y N Dishwasher Avg. Age: _____

Overall Conditions: _____

Elevator

Type: _____ Size: _____ Last Upgraded: _____

Sprinkler system

Type: Full Partial NA Comments: _____

Fire Alarm system

Type: Full Partial NA Comments: _____

Smoke Detector Locations: _____

Structure

Foundation

Type: Slab on Grade Crawl Space Basement Other: _____

Overall Condition: _____

Roof

Type: Pitched Flat Combo. Age: _____ Sheathing Thickness: _____

Overall Condition: _____

VHDA TO FILL IN GREY AREAS

Roof Overhang at Breezeway Stair Minimum 5': Y N

Insulation and Ventilation

Attic

Insulation Type: _____ R-Value: _____ Ventilation Type: _____

Crawl space

Insulation Type: _____ R-Value: _____ Ventilation Type: _____

Exterior wall

Insulation Type: _____ R-Value: _____ **Sheathing Type: _____**

Structural Deficiencies

Disclosed or Identified Structural Deficiencies: _____

_____

Doors

Common

Overall Condition: _____

Apt. Entry Doors

Material: Steel OR Wood Door Type: Flush Raised Panel Variety Age: _____

Condition: _____

Hardware Type: Knob OR Lever Hardware Finish: Silver Yellow Variety

Hardware Condition: _____

Pre-hung Doors

Door Type: Flush Raised Panel Variety Condition: _____

Hardware Type: Knob OR Lever Hardware Finish: Silver Yellow Variety

Hardware Condition: _____

Windows

Common

Age: _____ Overall Condition: _____

Apts.

Type: Vinyl Alum. Store Front Alum. Insulated: Y N

Age: _____ Overall Condition: _____

Breezeway Stair

Type: Wood Steel Concrete Combo. Condition: _____

Building Envelope

Material Type: _____ Age: _____ Condition: _____

Brick Row Lock Slope: Adequate OR Not adequate OR Need Architect To Perform Inspection

Exterior Trim

Type: _____ Condition: _____

Flooring

Carpet Condition: G P NA Ceramic Condition: G P NA

Hardwood Condition: G P NA Vinyl Condition: G P NA

Notes: _____

Cabinets and Counters

Kitchen Condition: _____ Bath Condition: _____

Drywall

Overall Condition: _____

_____

_____

VHDA TO FILL IN GREY AREAS

Baseboard

Type: _____ Condition: _____

Kitchen Pass Through

Existing: Y N To be Provided: Y N NA

Environmental

Storage Tanks

Above Ground: Y N Underground: Y N Will be removed: Y N NA

Notes: _____

Lead Paint

Present: Y N Notes: _____

Asbestos

Present: Y N Notes: _____

General Notes

VHDA TO FILL IN GREY AREAS

Version History

Saved Version	Date	Description